LIXIL

Link to Good Living

LIXIL Window Systems Private Limited

Corp. Office: Plot No. 75, Sector 8, IMT Manesar, Gurgaon, Haryana, India - 122050.,

Ph: +91 124 4350000, E-mail: lws.india@LIXIL.com

LIXIL Group Corporation
36F, Kasumigaseki Building,
3-2-5 Kasumigaseki, Chiyoda-ku,
Tokyo 100-6036, Japan
http://global.LIXIL.co.jp/e

LIXIL International Pte. Ltd.
8 Temasek Boulevard,
#12-03 Suntec Tower 3, Singapore 038988
Tel : +65 6690 4988 Fax : +65 6690 4986
http://global.LIXIL.co.jp/e

TOSTEM Thai Co., Ltd.
60/2 Soi Navanakorn 11,
Moo19 Phaholyothin Road,
Tambon Khlongnueng, Amphoe Khlongluang,
Pathumthani 12120, Thailand
Tel :+66 2529 0474-5 Fax : +66 2909 4487
http://www.LIXIL.TOSTEM.co.th

LIXIL Housing Products Manufacturing (Shanghai) Corporation
No14 Building Huabin
Industrial Park 99 Huajia Road
Songjiang Shanghai 201611

LIXIL (Thailand) Public Co., Ltd.
1/6 Moo 1, Phaholyothin Road K.M.32,
Klong Neung, Klong Luang,
Pathumthani 12120, Thailand
Tel : +66 2901 4455 Fax : +66 2901 4488
http://www.LIXIL.co.th

PT LIXIL Aluminium Indonesia
JV entity with Rodamas group Jl. Let. Jend. S.
Parman Kav. 32-34 Jakarta 11480, Indonesia
Tel :+62 21 2939 3388
Fax : +62 21 5367 4394
http://global.LIXIL.co.jp/e

LIXIL Vietnam Corporation
Charm Vit Tower, 18th Floor,
117 Tran Duy Hung, Hanoi, Vietnam
Tel : +84 4 3556 6639
Fax : +84 4 3556 6031
http://www.INAX.com.vn

LIXIL Philippines Ltd. Co.
18/F The Pearlbank Centre,
146 Valero Street, Salcedo Village,
Makati City 1227, Philippines
Tel : +63 2893 3113
Fax : +63 2893 9980
http://americanstandard.com.ph

LIXIL Taiwan
Rm. 701, 7F., No.225,
Nanjing E. Rd., Zhongshan, Dist.,
Taipei City 104, Taiwan

TOSTEM

PRE-ENGINEERED WINDOWS

PART OF LIXIL

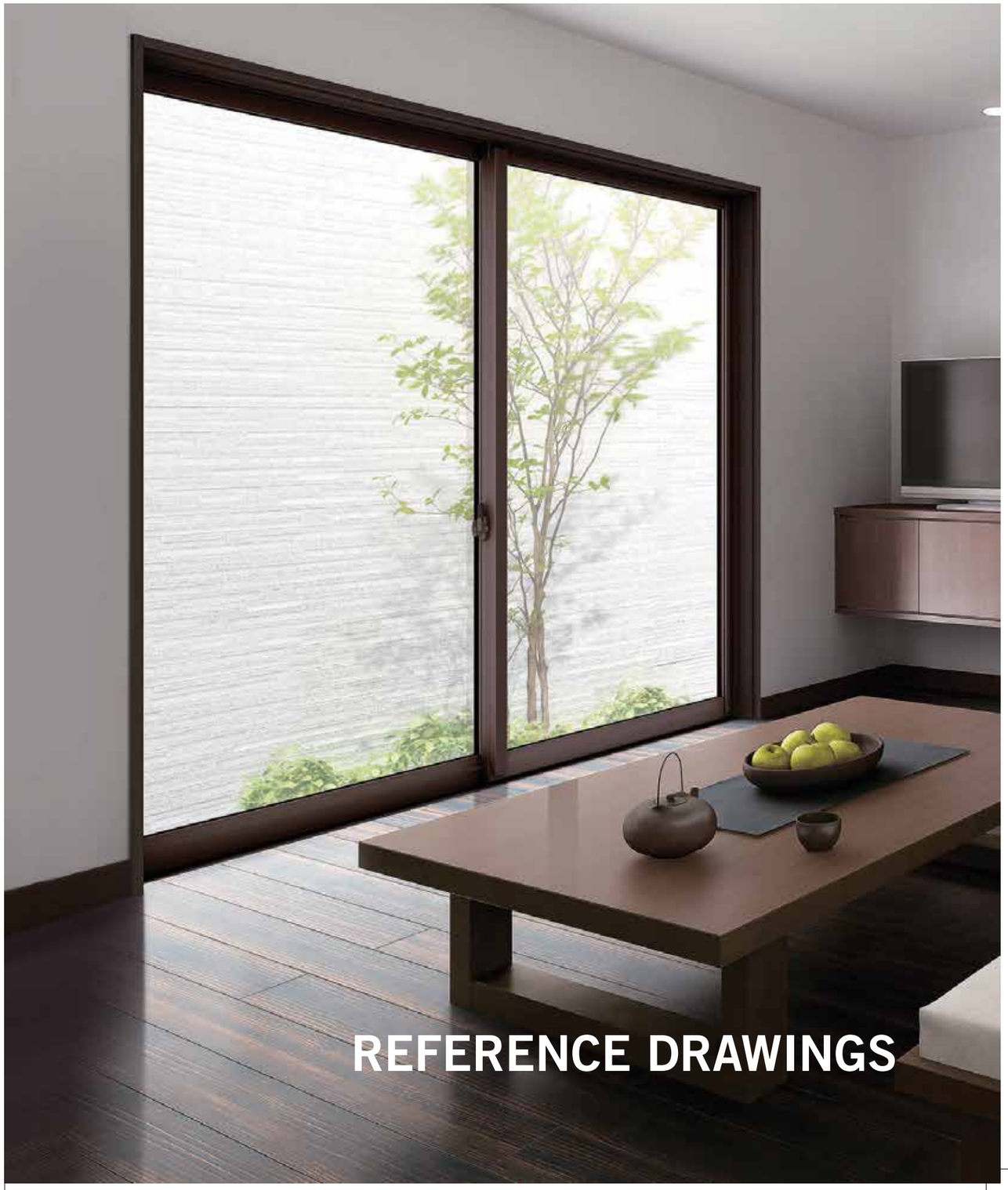

REFERENCE DRAWINGS

ABOUT LIXIL

Every person on the planet dreams of a better home. LIXIL makes that possible with pioneering housing and water products.

A better home is made up of surprisingly simple things – doors and windows that connect you with the world outside; baths to escape in after a long day; kitchens that unleash creativity; toilets that provide cleanliness and comfort; showers and faucets to experience water in new ways; interiors and exteriors that bring spaces to life.

LIXIL makes better homes a reality for everyone, everywhere.
Drawing on our Japanese heritage, we create and innovate using world-leading technologies to make high quality products that solve everyday, real life challenges.

But the LIXIL difference isn't what we do, it's the way we do it:

Meaningful design. We innovate because we should, not because we can.
Entrepreneurial spirit. Working with partners, experimenting often, and learning fast from failures to move with speed.
Access to all. Adapting existing technologies to meet universal consumer needs.
Responsible business growth. Impacting global issues like sanitation, water conservation and environmental sustainability.

We are proud that our products touch the lives of more than a billion people every day, but there is potential to do so much more.

Being path pavers in consumer centricity uncovers opportunities for real differentiation enabling us to find a unique, clutter breaking proposition. Our deep understanding of our consumers' lives drive us to create truly differentiated products, services and business models. As we continue to expand across Asia Pacific, our endeavor is to reach beyond our current channels and capabilities, to understand existing and undiscovered needs and become relevant to even more people. We will learn, experiment and continue to create solutions for better living spaces for today and tomorrow.
The real work starts now…

LIXIL Link to Good Living

LIXIL GROHE American Standard INAX TOSTEM DXV

List of Contents

Page

GRANTS

THE BIGGER & BETTER WINDOW

GRANTS WINDOW SERIES

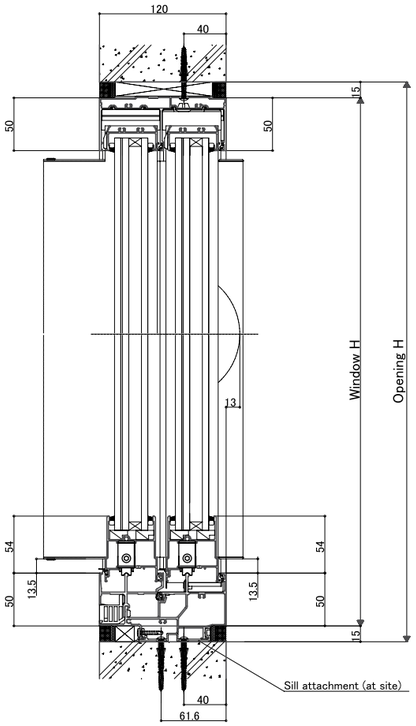

<Vertical section:2 panels sliding window >

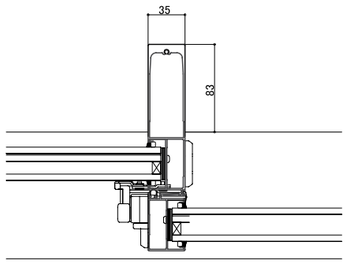

<Stile detail: In case of largest openings>

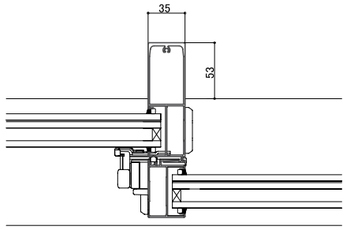

<Stile detail: In case of larger openings>

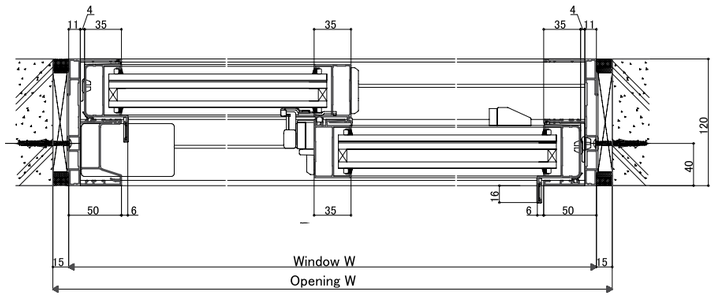

<Horizontal section: 2panels sliding window >

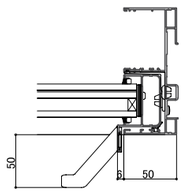

<In case with handle option>

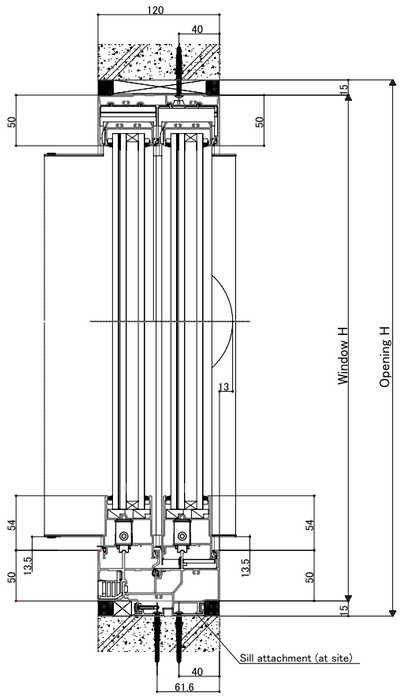

<Vertical section:4 panels sliding window >

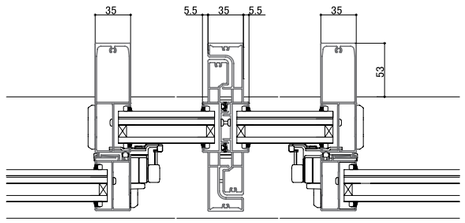

<Stile detail: In case of large openings >

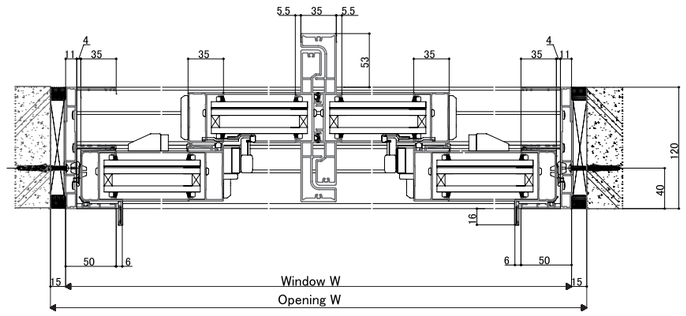

<Horizontal section:4 panels sliding window >

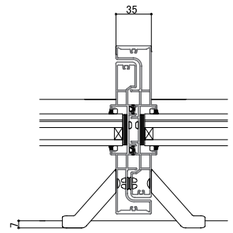

<In case with handle option>

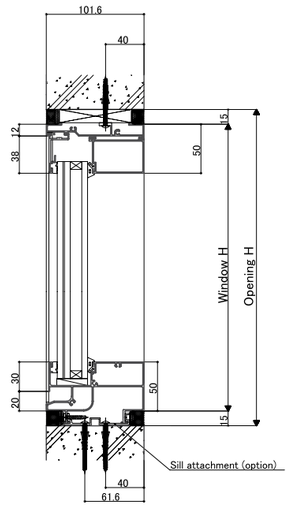

<Vertical section: Fix window><

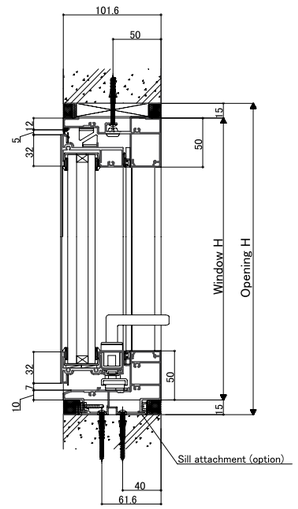

Vertical section: Awning window>

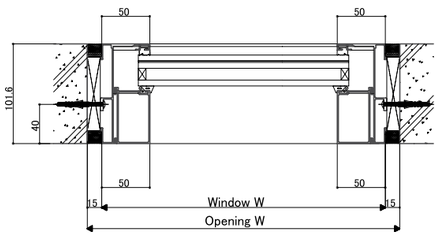

<Horizontal section: Fix window>

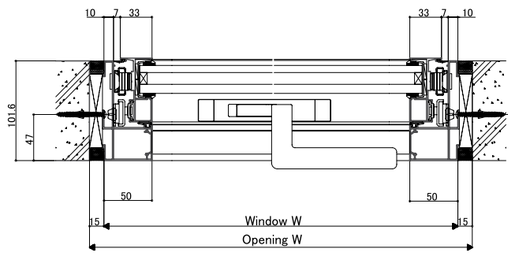

<Horizontal section: Awning window>

<Head detail>

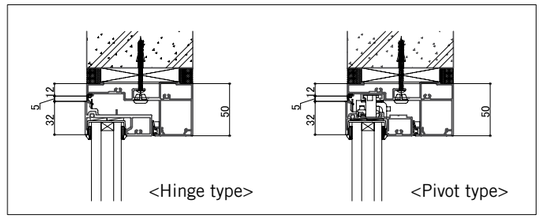

<Sill detail>

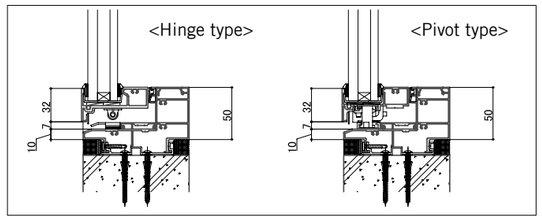

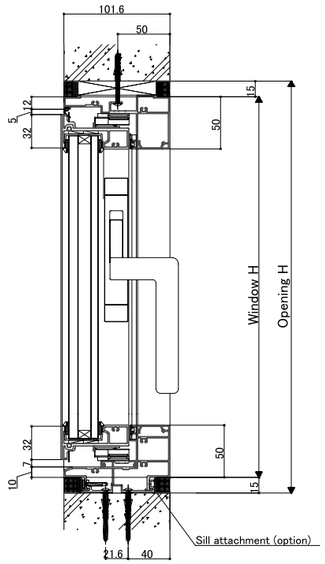

<Vertical section: Casement (with friction stay)>

<Jamb detail>

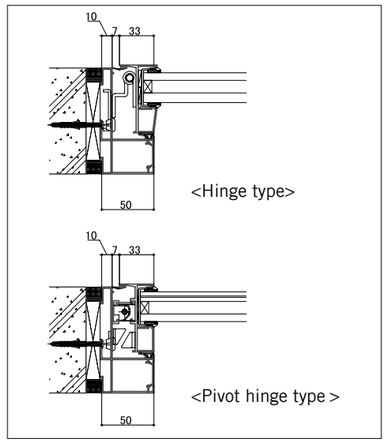

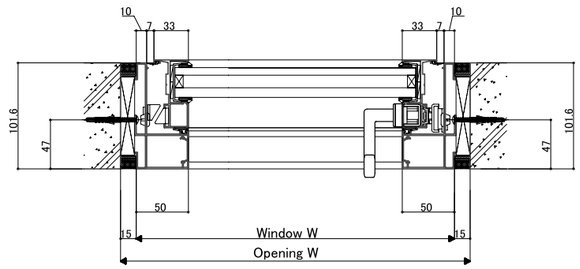

<Horizontal section: Casement (with friction stay)>

GRANTS DOOR SERIES

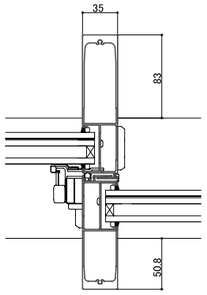

<Stile detail: In case of largest openings >

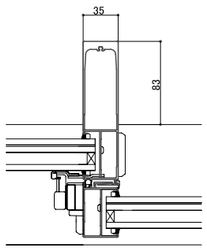

<Stile detail: In case of larger openings >

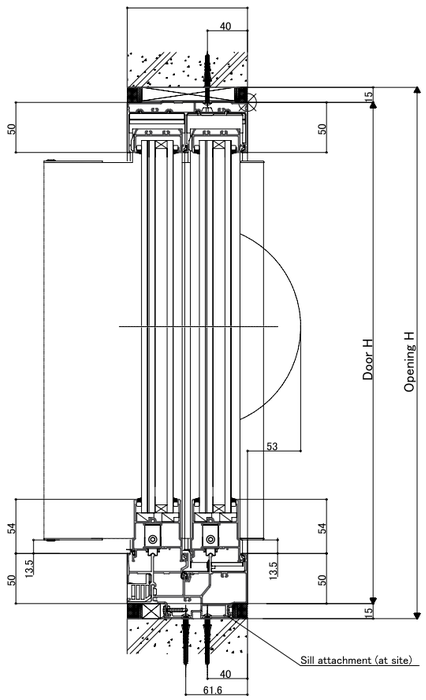

<Vertical section: 2 panels sliding door>

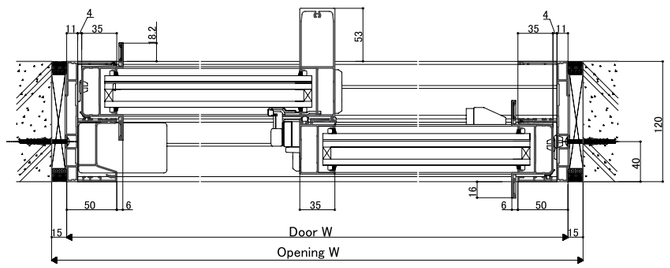

<Horizontal section: 2 panels sliding door>

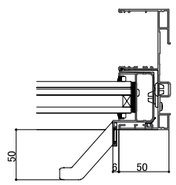

<In case with handle option>

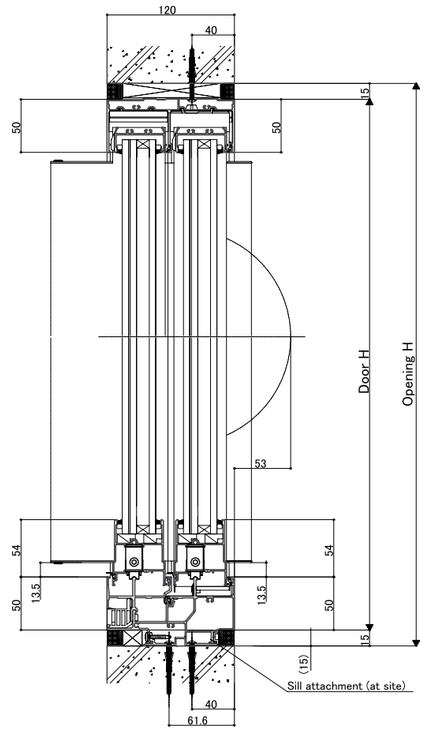

<Vertical section: 4 panels sliding door>

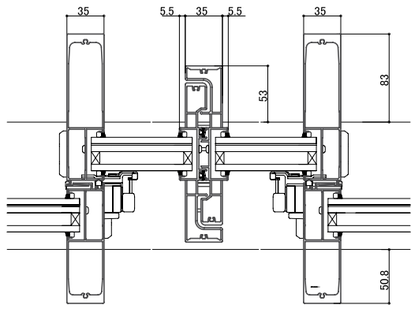

<Stile detail: In case of largest openings >

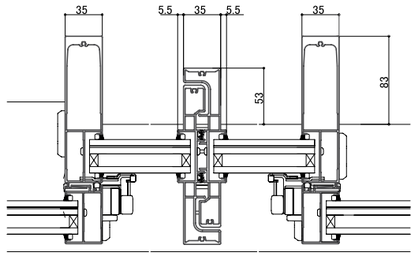

<Stile detail: In case of larger openings >

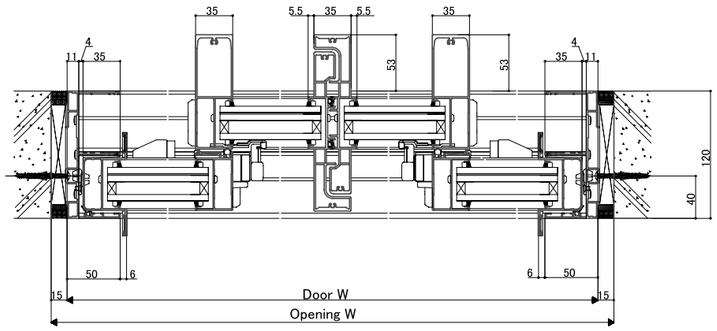

<Horizontal section: 4 panels sliding door>

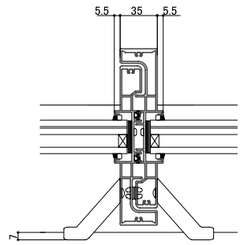

<In case with handle option>

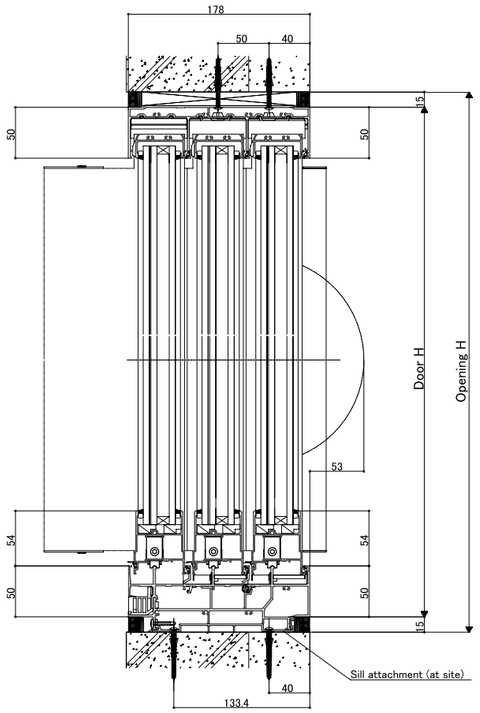

<Vertical section: 3 panels sliding door>

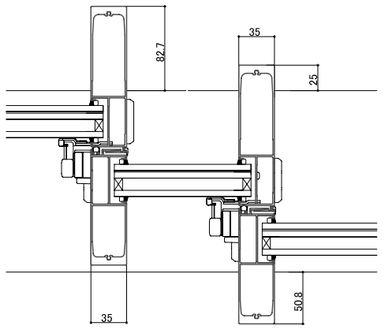

<Stile detail: In case of largest openings>

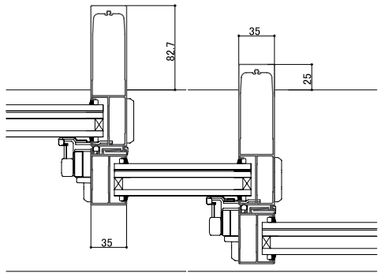

<Stile detail: In case of largest openings >

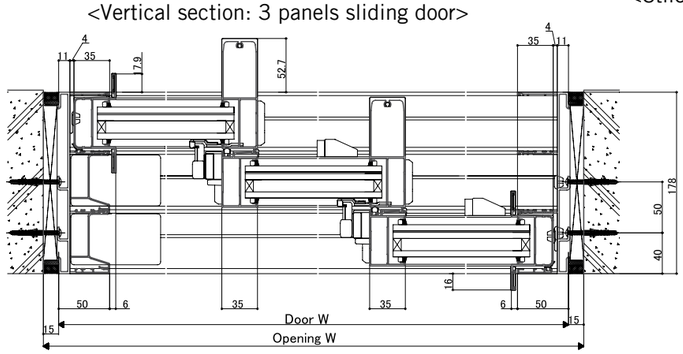

<Horizontal section: 3 panels sliding door>

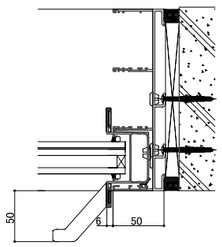

<In case with handle option>

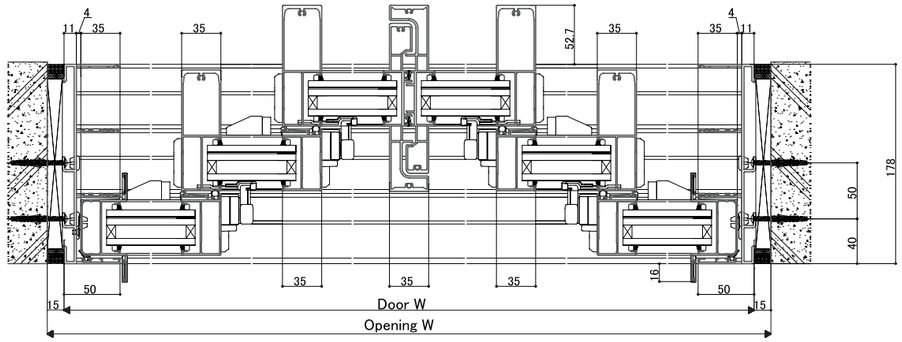

<Horizontal section: 6 panels sliding door>

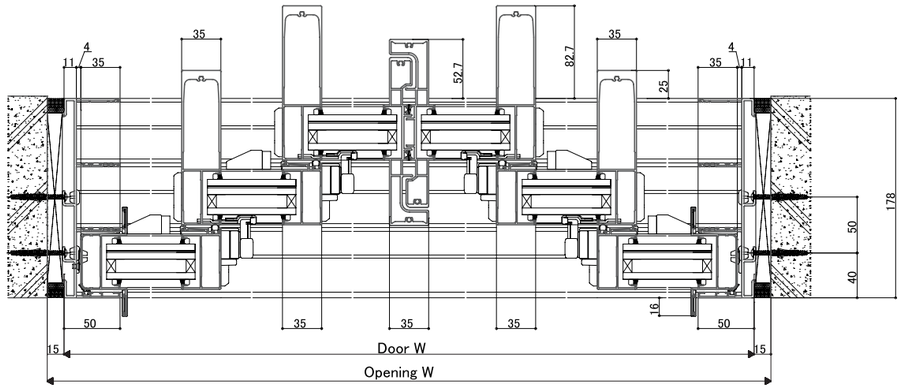

<Horizontal section: 6 panels sliding door (larger) >

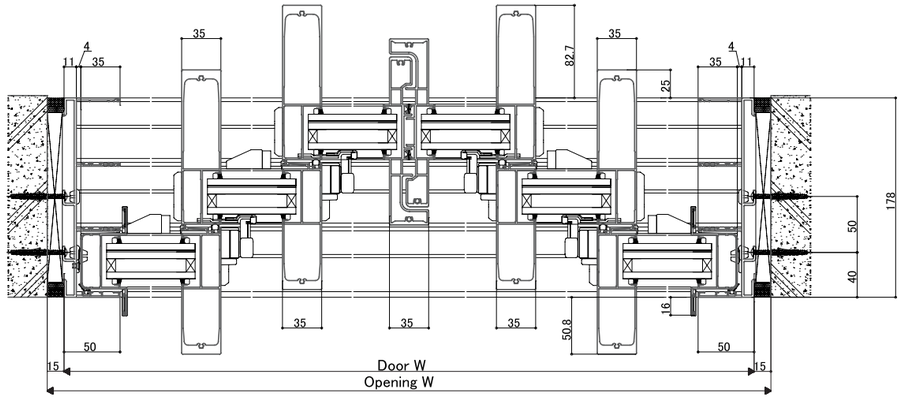

<Horizontal section: 6 panels sliding door (largest) >

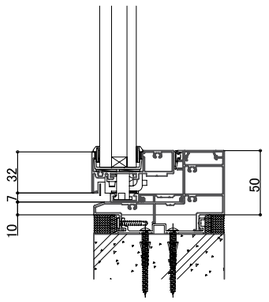

<Sill detail: Pivot hinge>

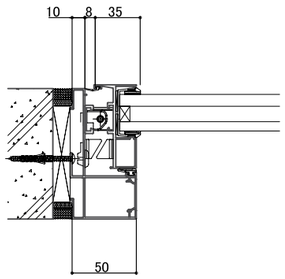

<Jamb detail: Pivot hinge>

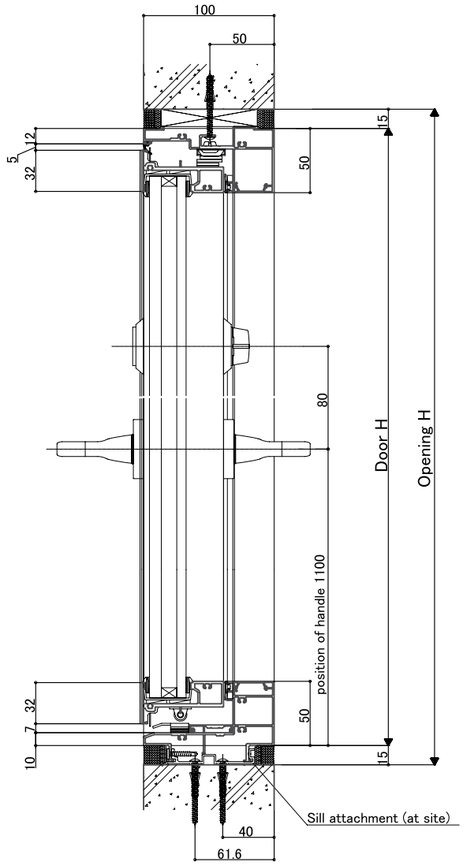

<Vertical section: Single out-swing door>

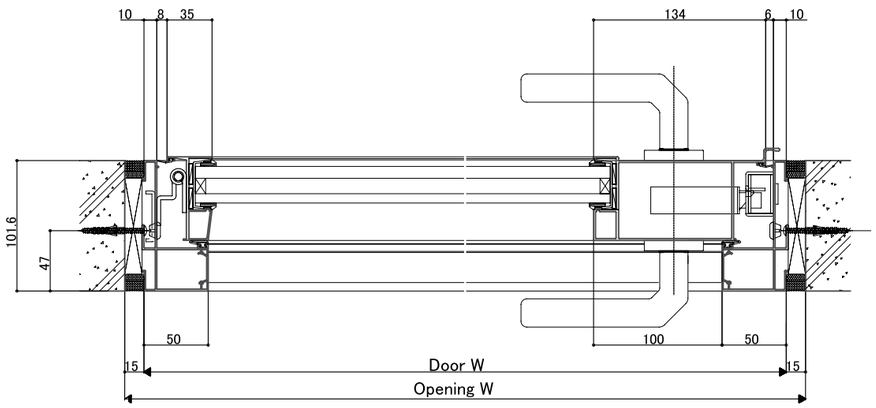

<Horizontal section: Single out-swing door>

GRANTS COMBINATION

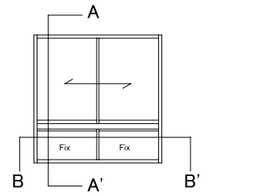

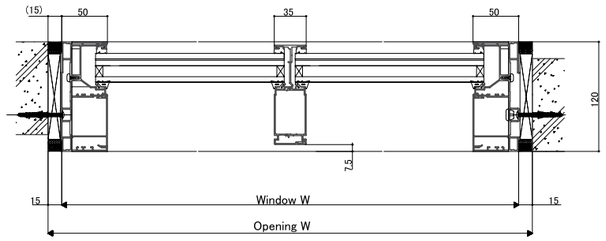

<Horizontal section: Sliding/Fix B-B'>

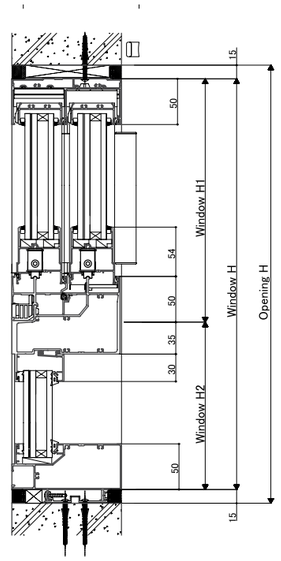

<Vertical section: Sliding/Fix A-A'>

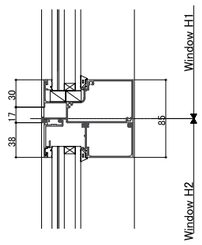

<Vertical: Fix/Fix transom><

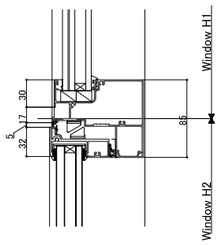

Vertical: Fix/Projection transom>

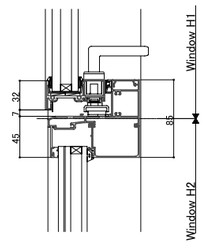

<Vertical: Projection/Fix transom>

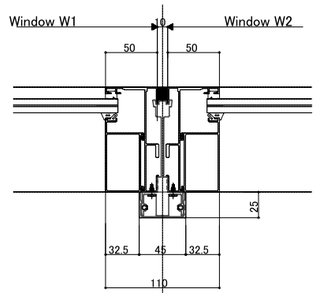

<Mullion type A>

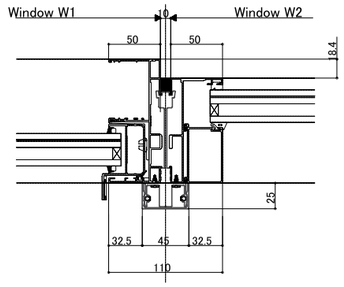

<Mullion type A with sliding window>

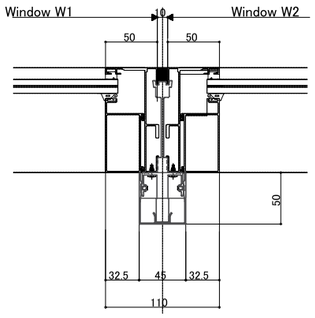

<Mullion type B> <

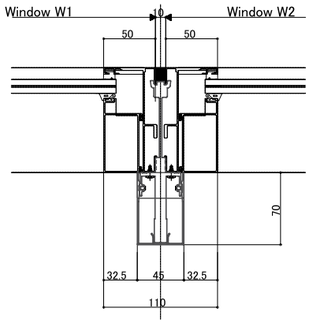

Mullion type C>

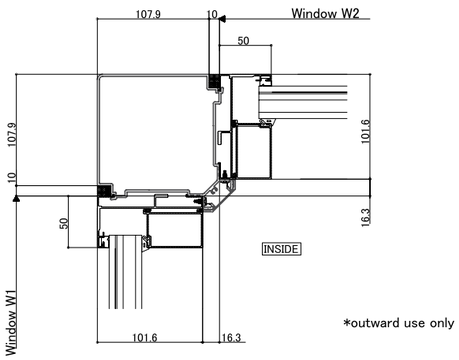

<Cor ner mullion>

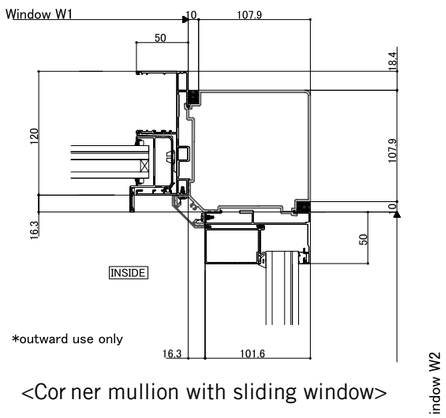

<Cor ner mullion with sliding window>

WE PLUS

VERSATILE PRODUCT FOR HIGH-RISE

WE PLUS WINDOW SERIES

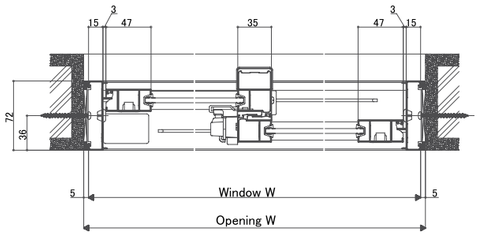

<Horizontal section: 2 panels sliding window>

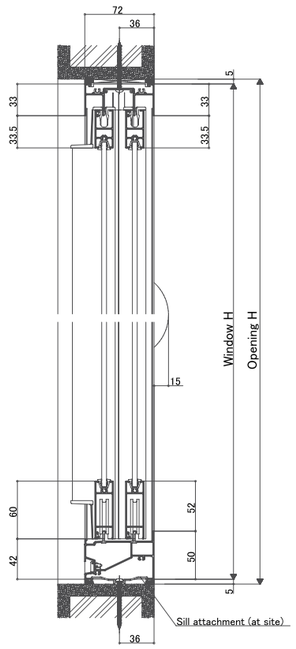

<Vertical section: 2 and 4 panels sliding window>

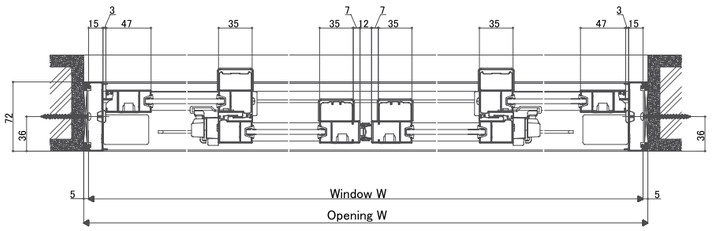

<Horizontal section: 4 panels sliding window>

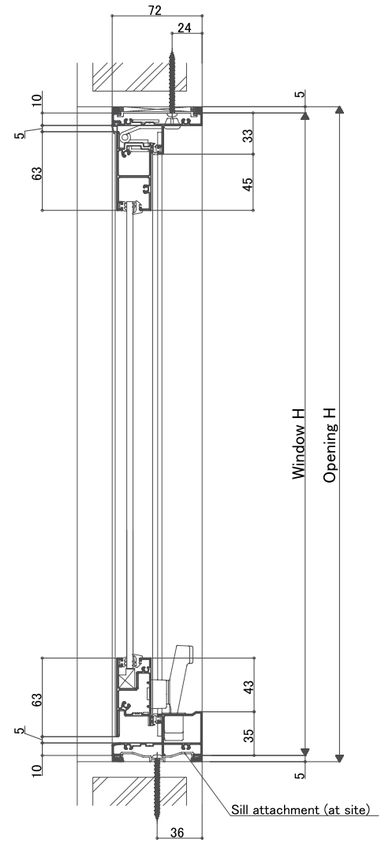

<Vertical section: Awning (single lock)>

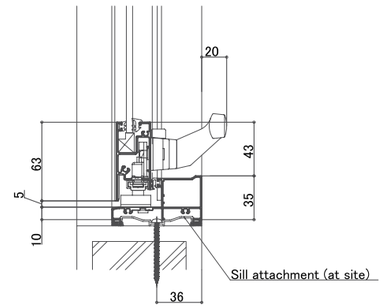

<Multi lock bottom detail>

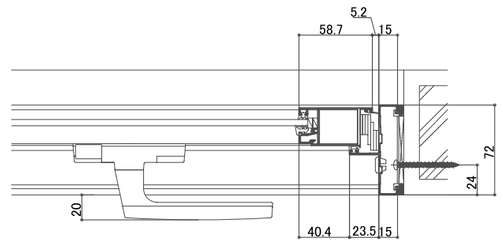

<Multi lock jamb detail>

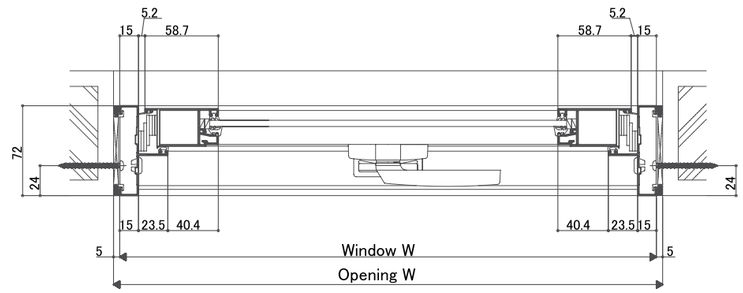

<Horizontal section: Awning (single lock)>

WE PLUS DOOR SERIES

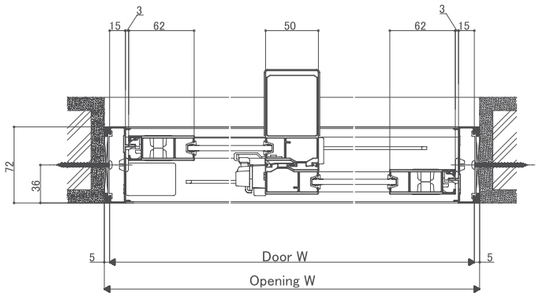

<Horizontal section: 2 panels sliding door>

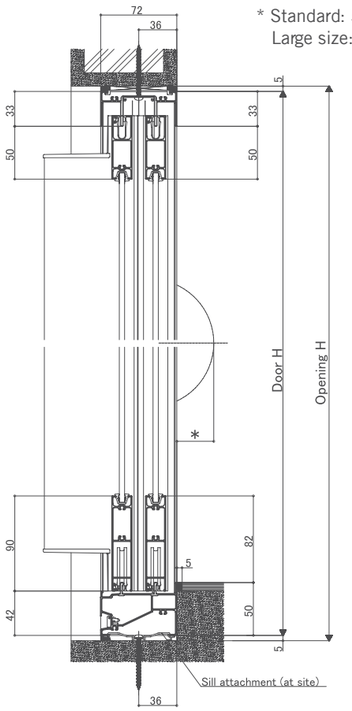

<Vertical section: 2 and 4 panels sliding door>

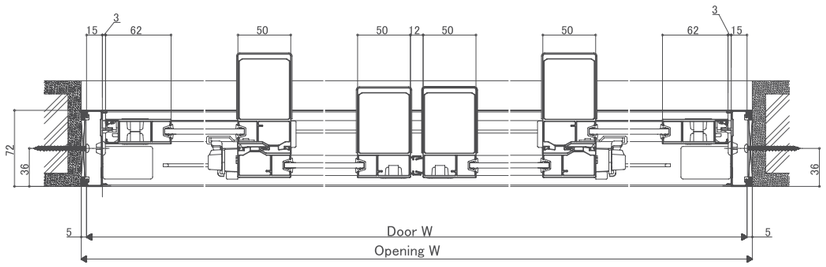

<Horizontal section: 4 panels sliding door>

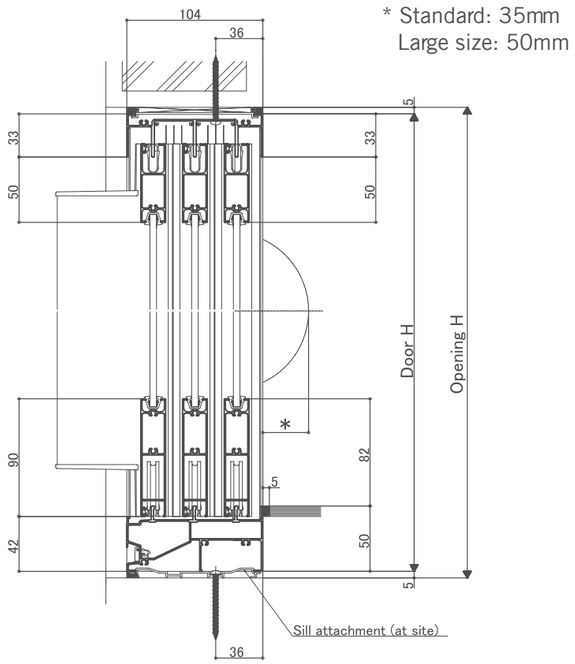

<Vertical section: 3 panels sliding door>

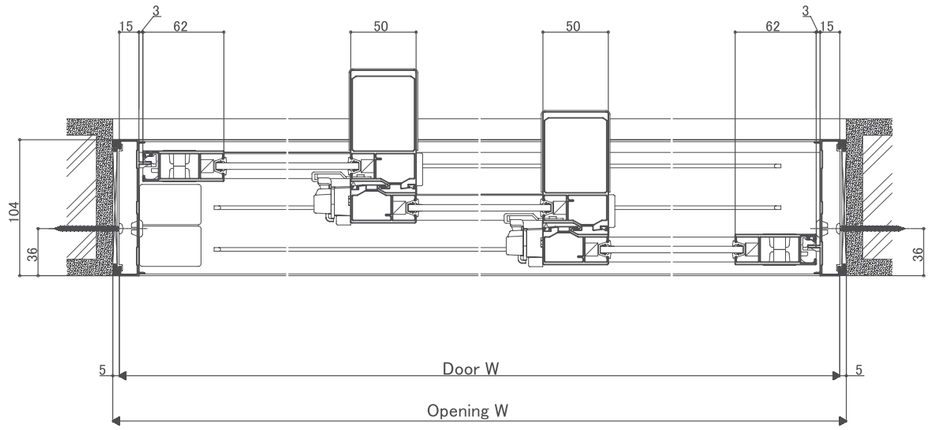

<Horizontal section: 3 panels sliding door>

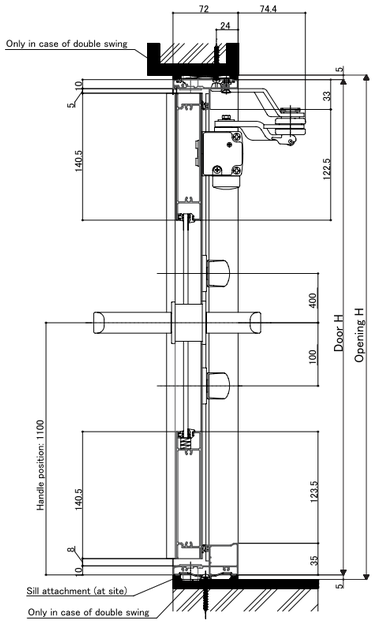

<Vertical section: Single & double out-swing door with sill>

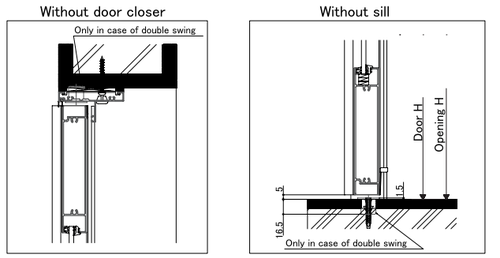

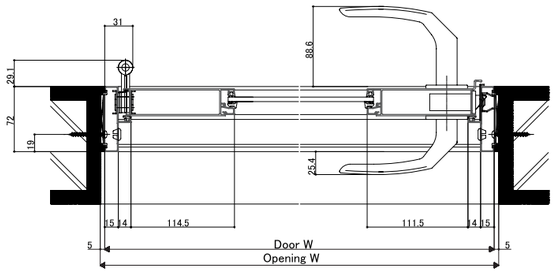

<Horizontal section: Single out-swing door>

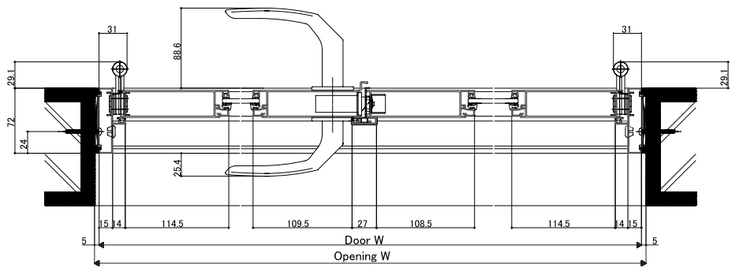

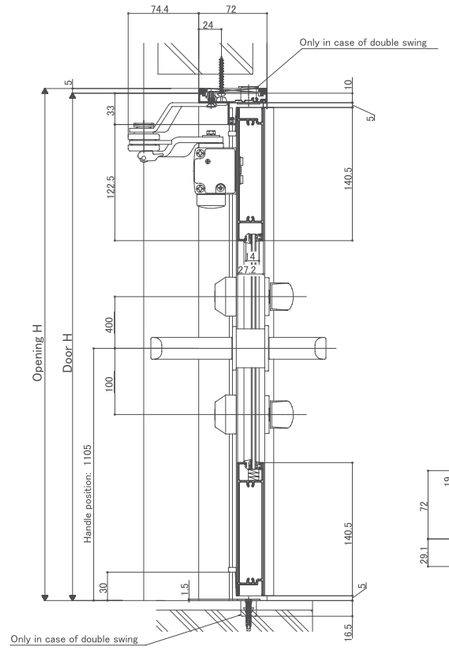

<Vertical section: Single & double in-swing door>

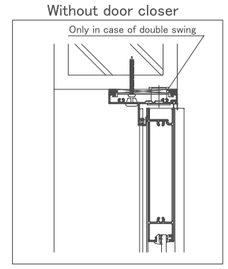

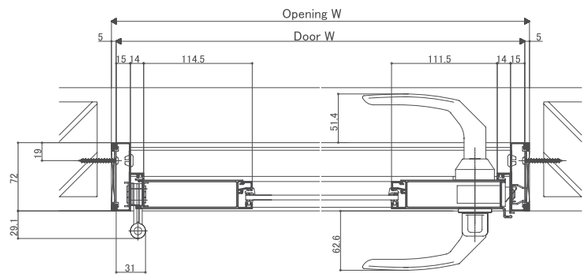

<Horizontal section: Single in-swing door>

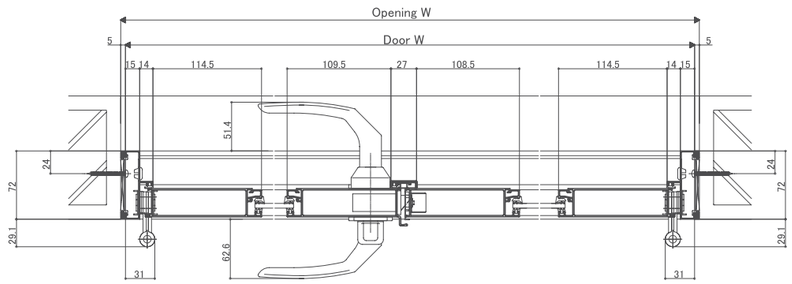

<Horizontal section: Double in-swing door>

WE PLUS COMBINATION

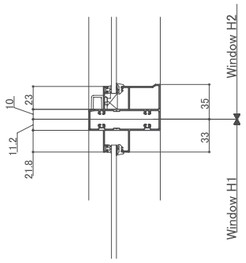

<Vertical: Fix/Fix transom>

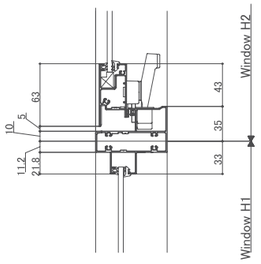

<Vertical: Projection/Fix transom>

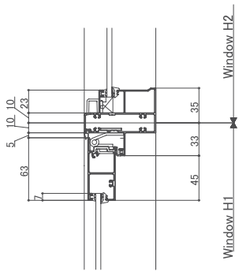

<Vertical: Fix/Projection transom>

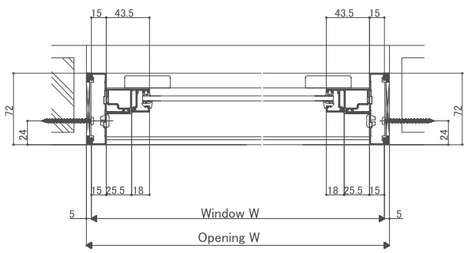

<Horizontal section window> : Combination fix

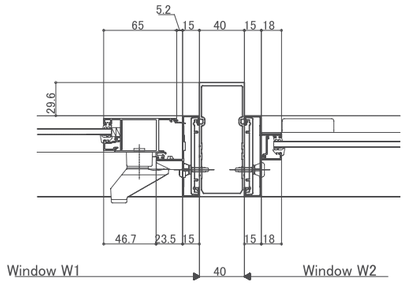

<Mullion (medium)>

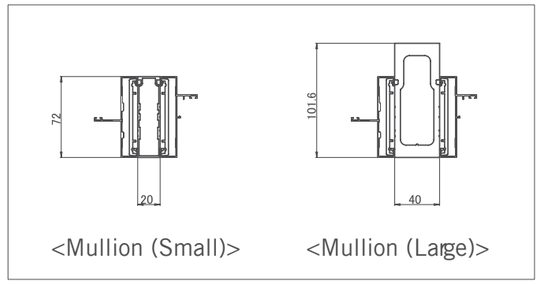

<Mullion (Small)> <Mullion (Large)>

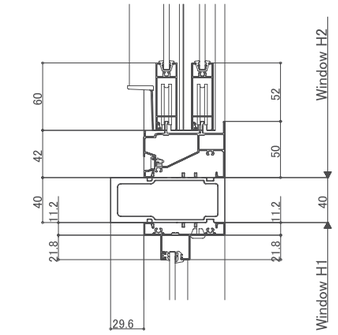

<Transom (Large)>

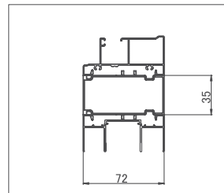

<Transom (Small)>

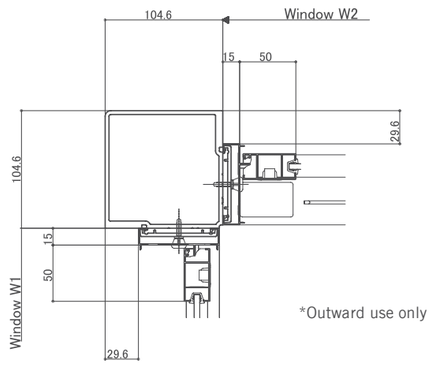

<Cor ner mullion (Large)>

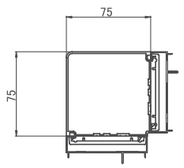

<Corn er mullion (Small)>


WE70

WE70 WINDOW SERIES

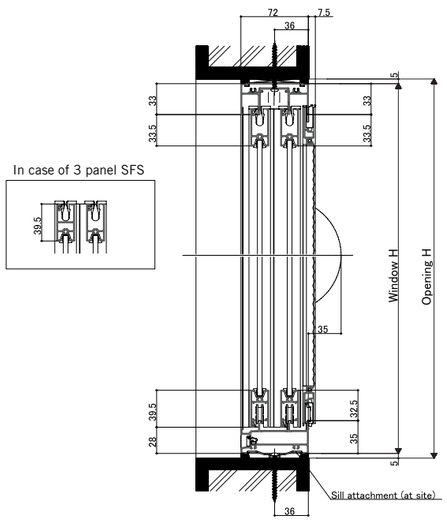

<Vertical section: 2, 4 and SFS 3 panels sliding window>

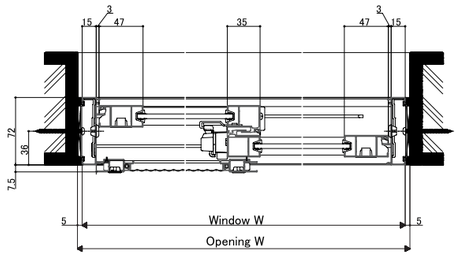

<Horizontal section: 2 panels sliding window>

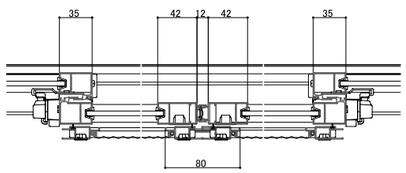

<Horizontal section: 4 panels sliding window>

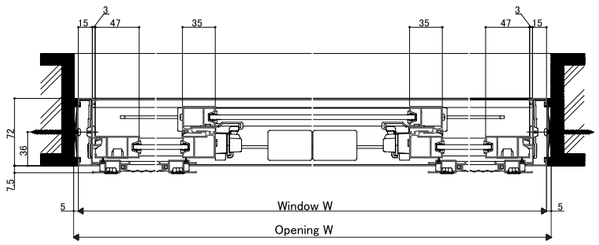

<Horizontal section: SFS 3 panels sliding window>

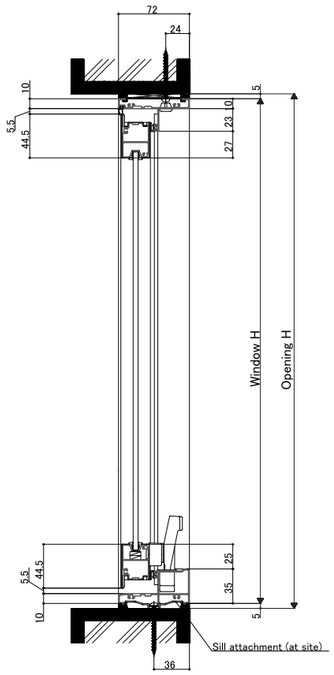

<Vertical section: Awning window>

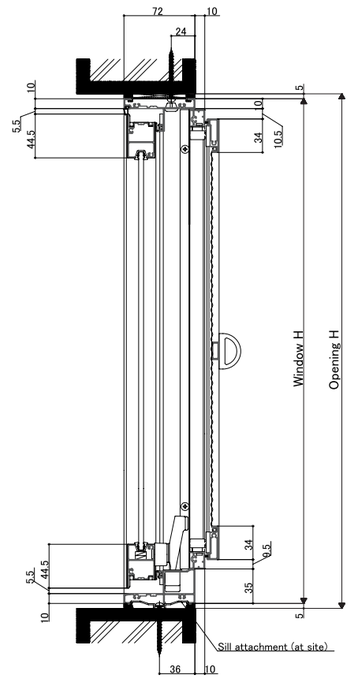

<Vertical section: Awning with screen>

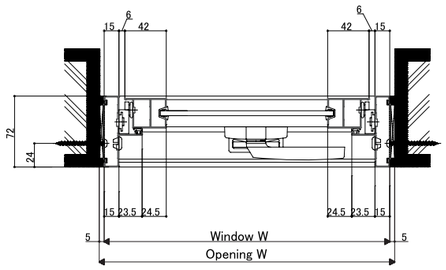

<Horizontal section: Awning window>

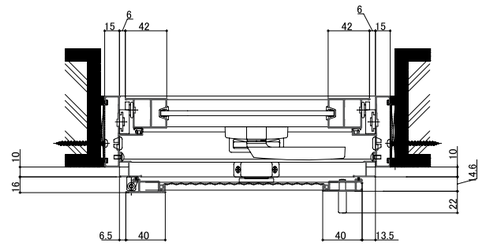

<Horizontal section: Awning with screen>

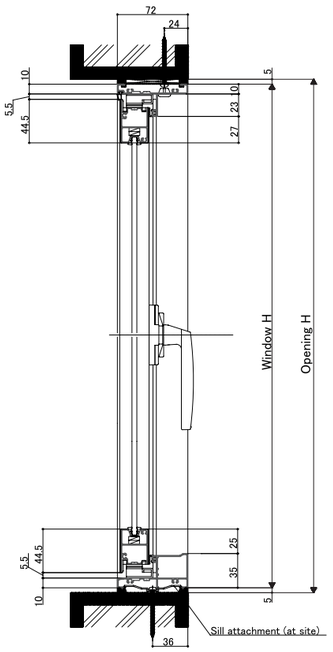

<Vertical section: Casement window>

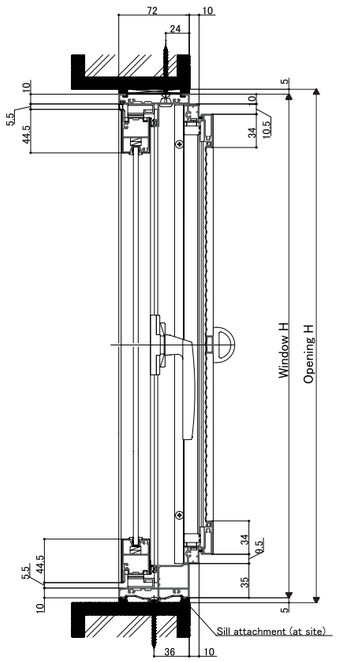

<Vertical section: Casement with scr een>

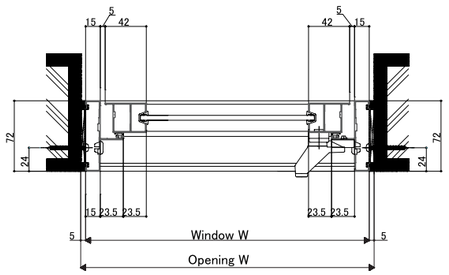

<Horizontal section: Casement window>

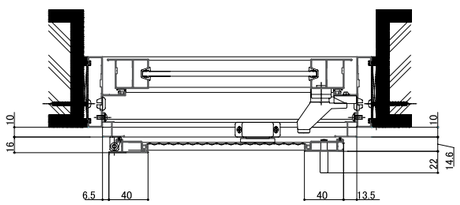

<Horizontal section: Casement with scr een>

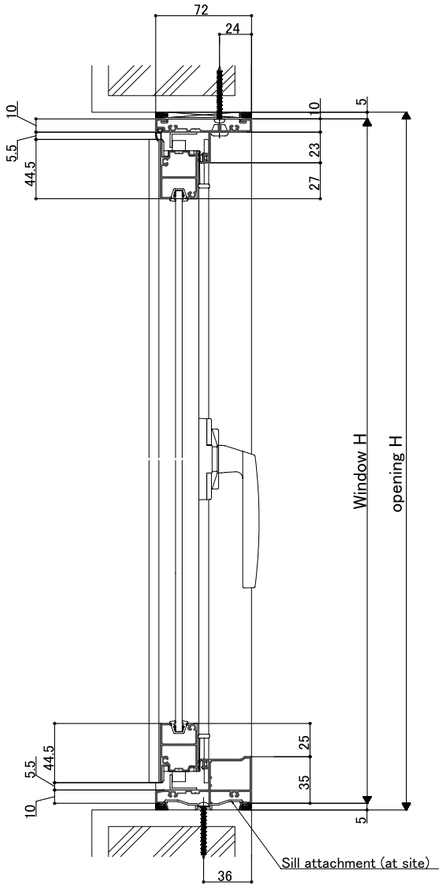

<Vertical section: Double casement window>

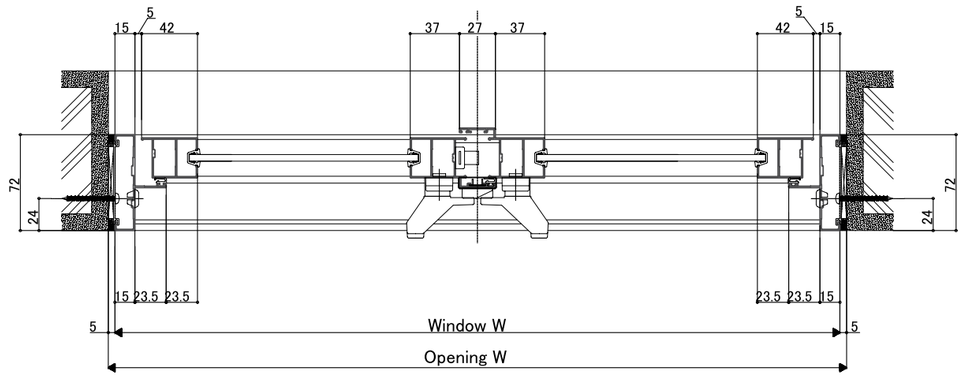

<Horizontal section: Double casement window>

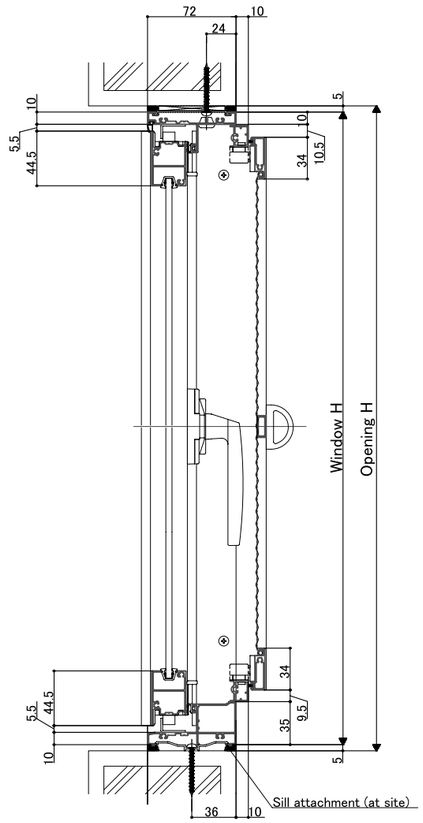

<Vertical section: Double casement with scr een>

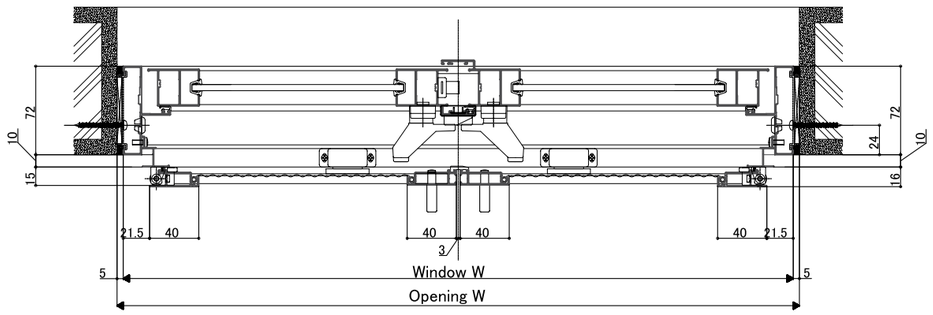

<Horizontal section: Double casement with scr een>

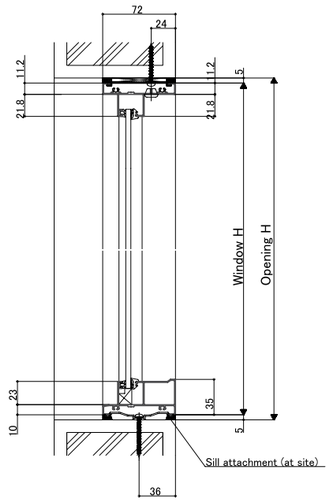

<Vertical section: Single and cor ner fix window>

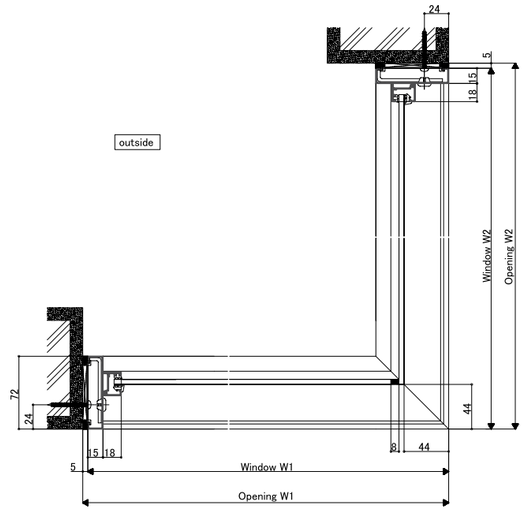

<Horizontal section: Inwar d fix window >

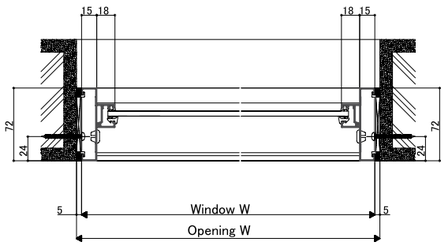

<Horizontal section: Single fix window>

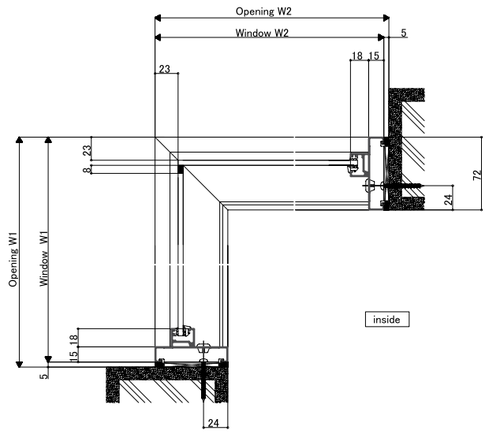

<Horizontal section: Outwar d fix window>

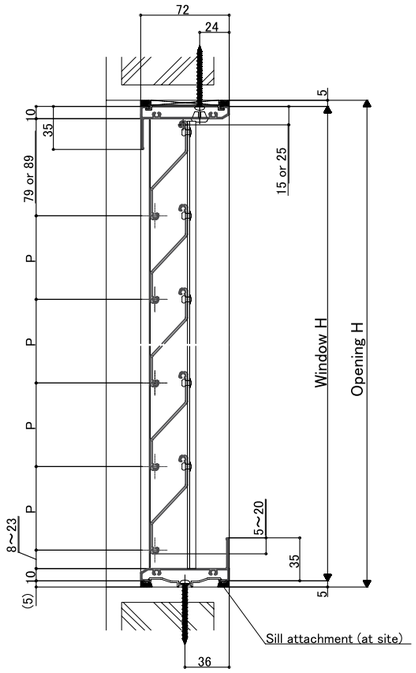

<Vertical section: Aluminum louver>

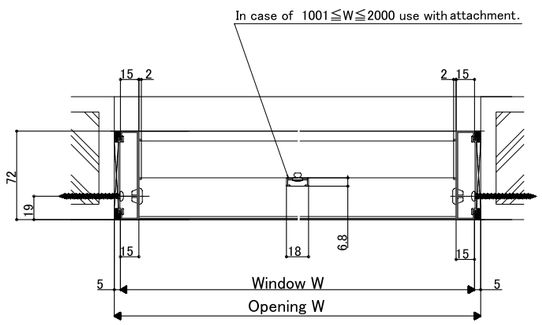

<Horizontal section: Aluminum louver>

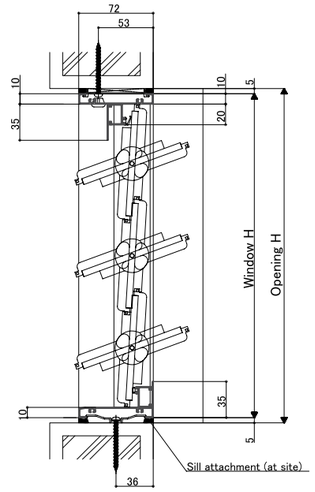

<Vertical section: Glass louver>

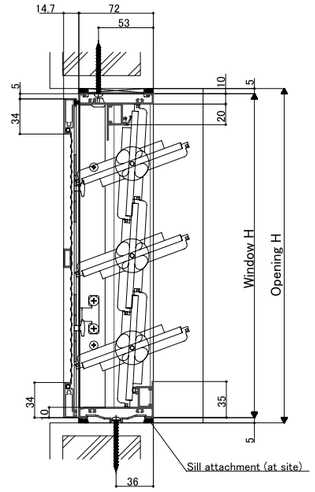

<Vertical section: Glass louver with scr een>

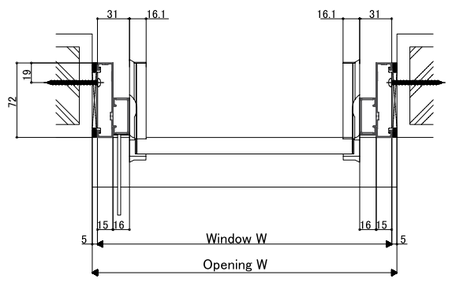

<Horizontal section: Glass louver >

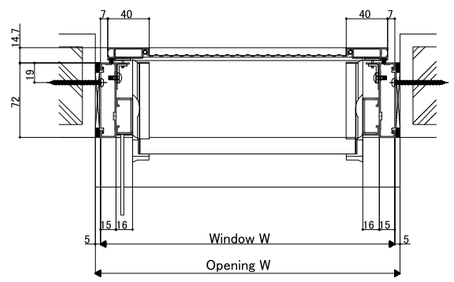

<Horizontal section: Glass louver with screen>

WE70 DOOR SERIES

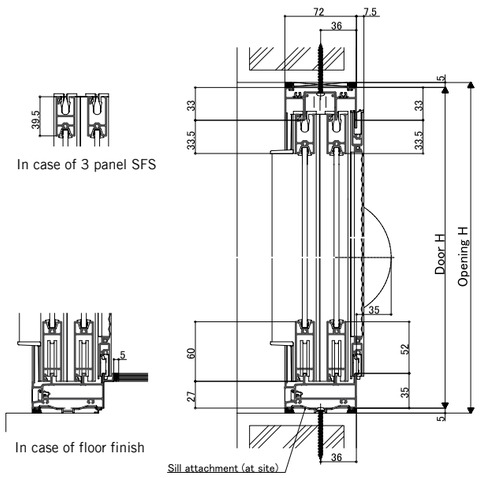

<Vertical section: 2, 4 and SFS 3 panels sliding door>

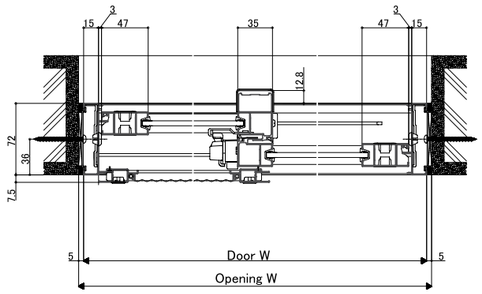

<Horizontal section: 2 panels sliding door>

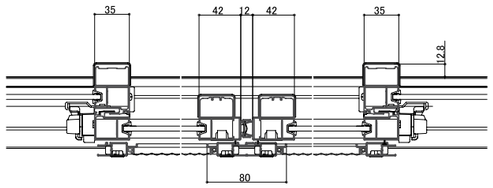

<Horizontal section: 4 panels sliding door>

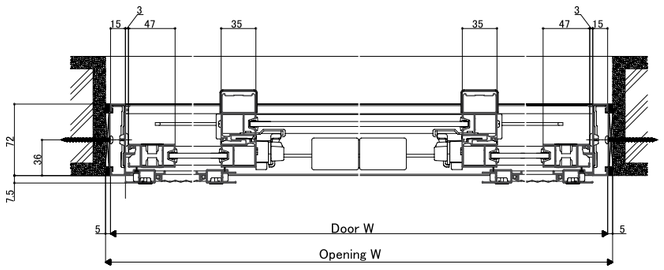

<Horizontal section: SFS 3 panels sliding door>

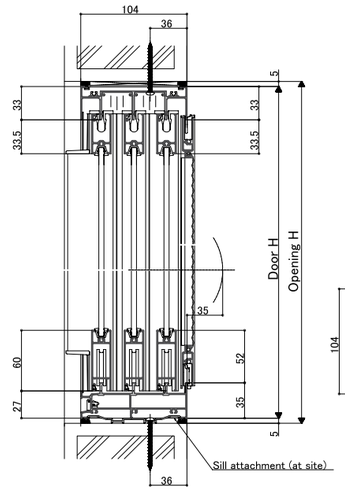

<Vertical section: 3, 6 panels sliding door>

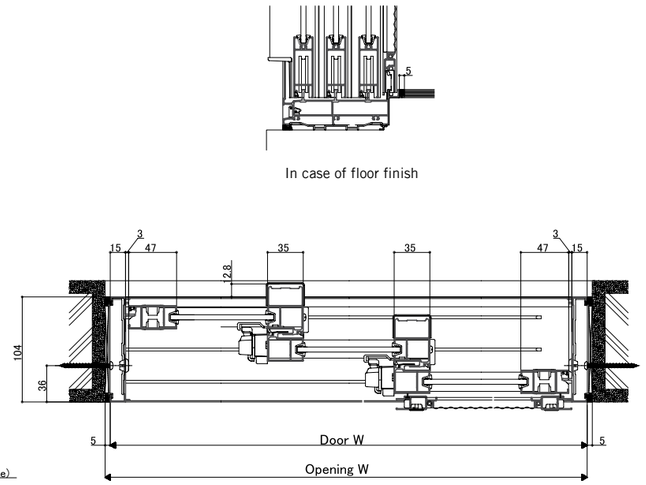

<Horizontal section: 3 panels sliding door>

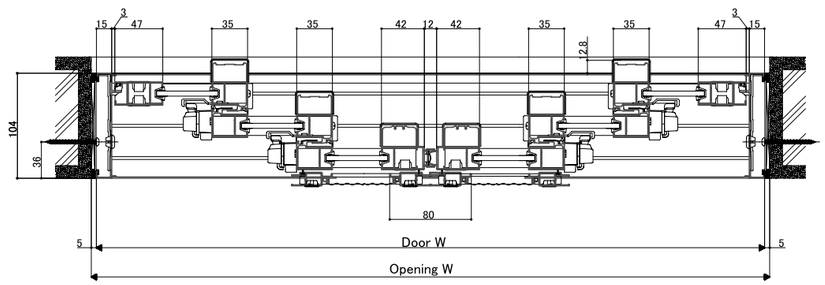

<Horizontal section: 6 panels sliding door>

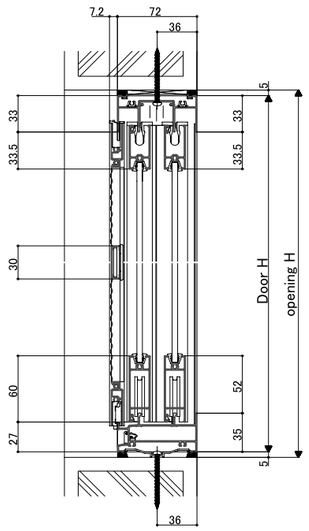

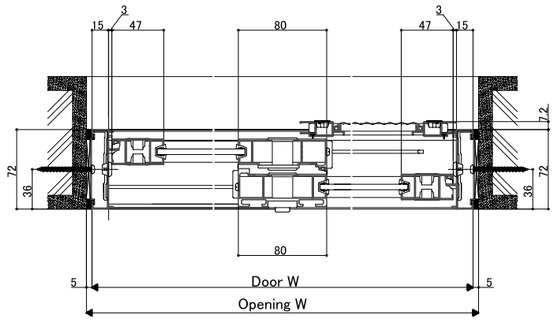

<Horizontal section: 2 panels entrance sliding door>

<Vertical section: 2 and 4 panels entrance sliding door>

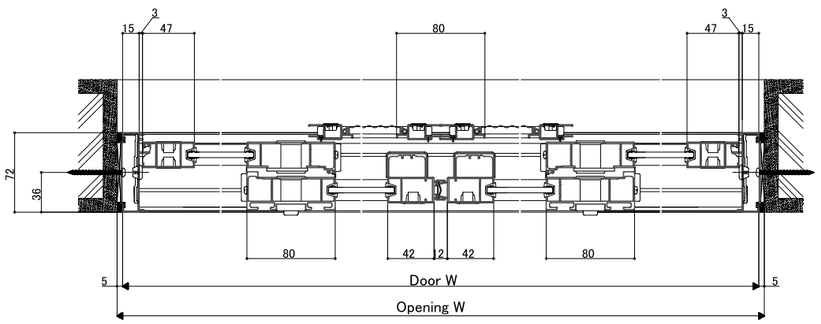

<Horizontal section: 4 panels entrance sliding door>

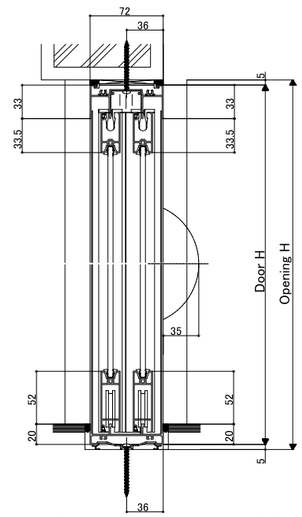

<Vertical section: 2 and 4 panels partition door >

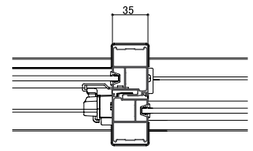

In case of Door H>2400mm

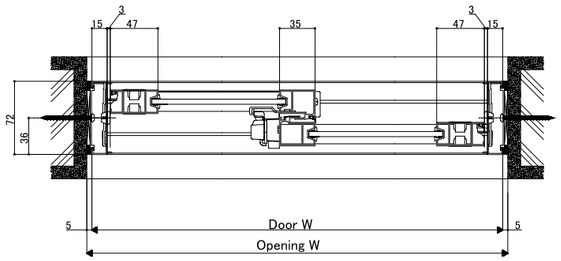

<Horizontal section: 2 panels partition door >

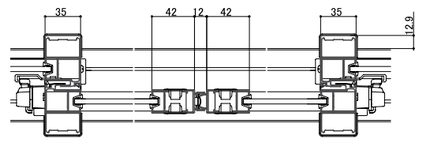

In case of Door H>2400mm

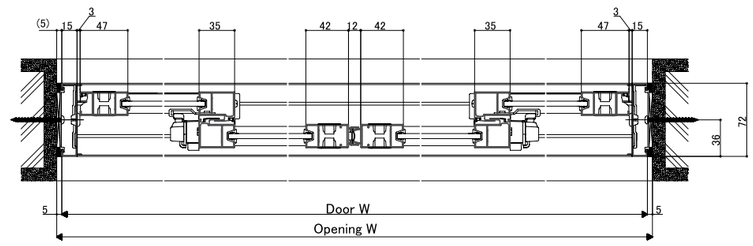

<Horizontal section: 4 panels partition door >

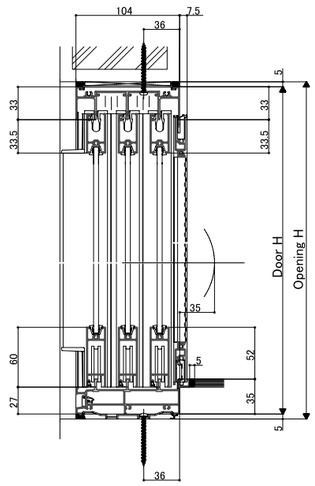

<Vertical section: 3 and 6 panels partition door>

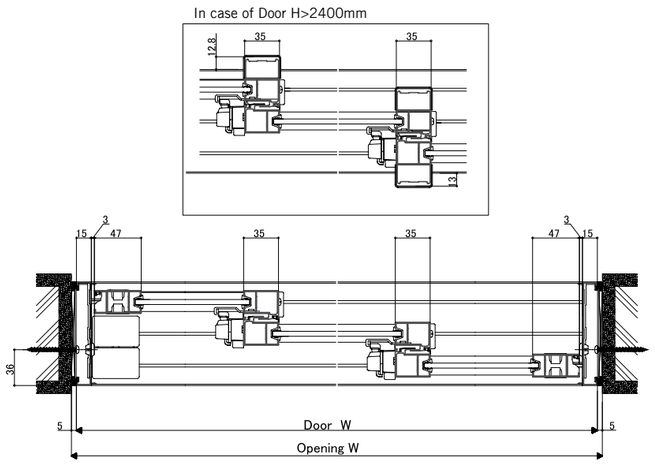

<Horizontal section: 3 panels partition door>

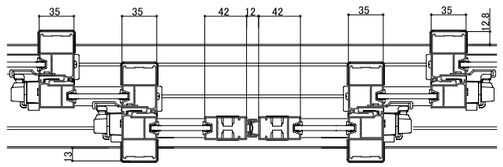

In case of Door H>2400mm

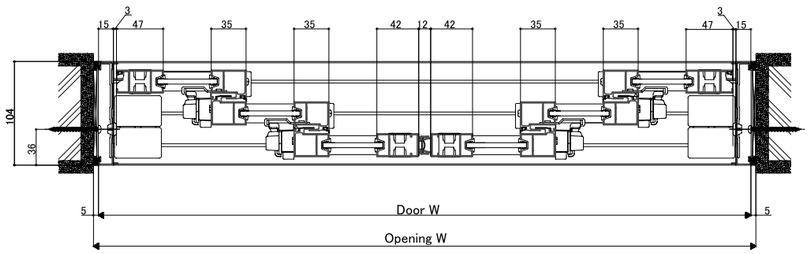

<Horizontal section: 6 panels partition door>

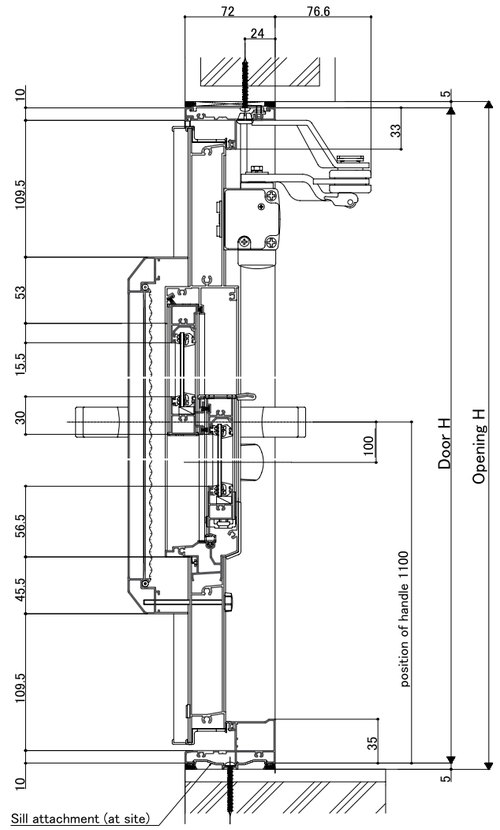

<Vertical section: Ventilation Door>

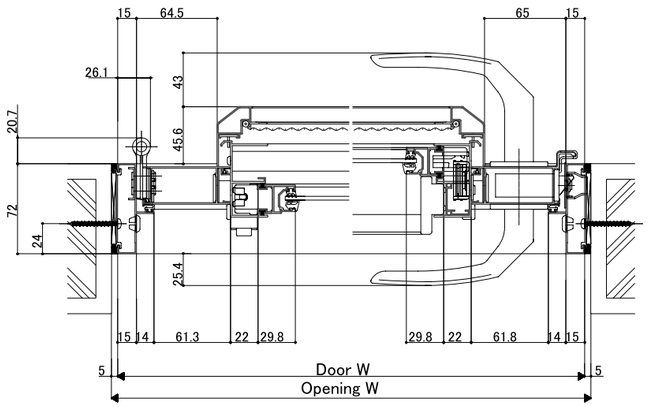

<Horizontal section: Ventilation Door>

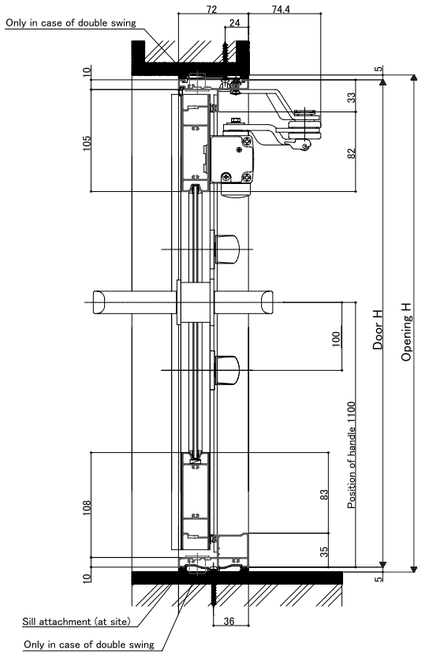

<Vertical section: Single & double out-swing door with sill>

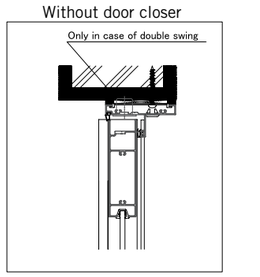

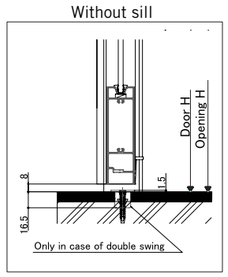

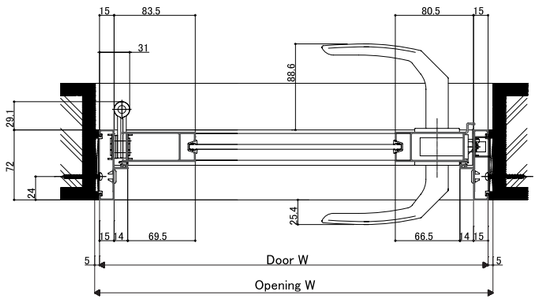

<Horizontal section: Single out-swing door>

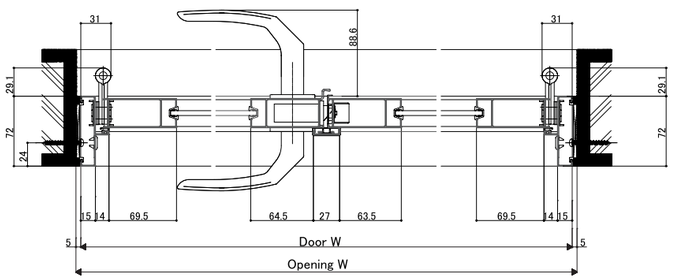

<Horizontal section: Double out-swing door>

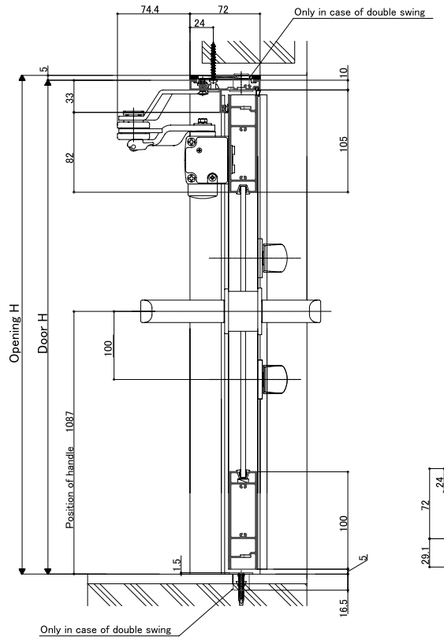

<Vertical section: Single & double in-swing door>

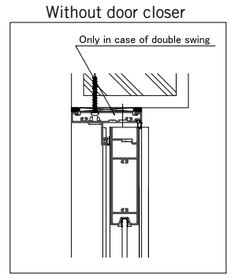

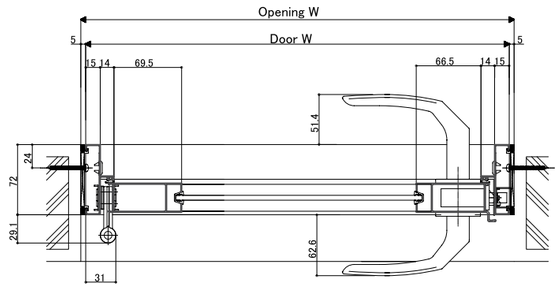

<Horizontal section: Single in-swing door>

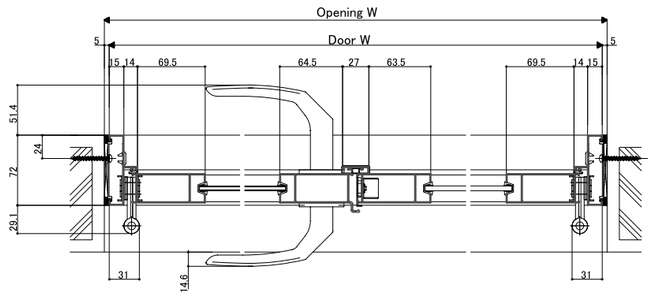

<Horizontal section: Double in-swing door>

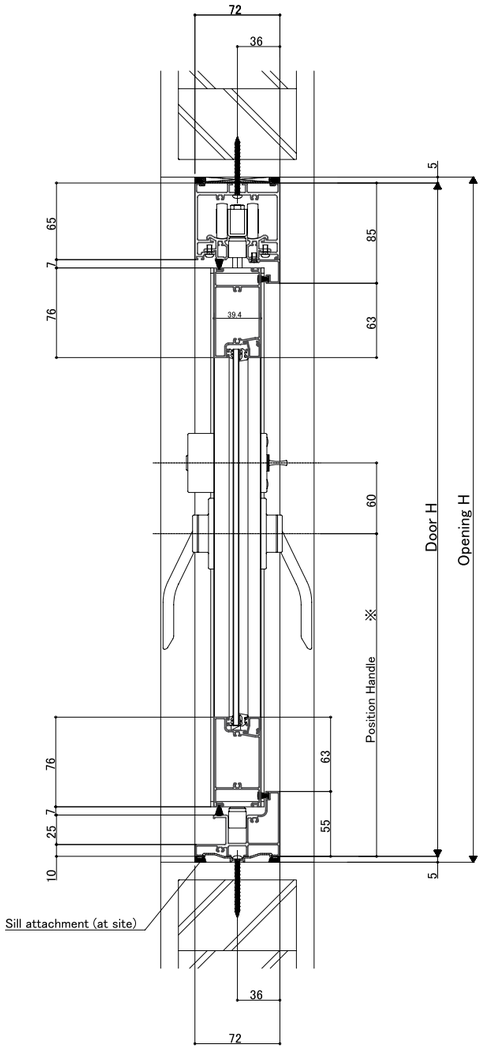

<Vertical section: Folding Door>

	※ Handle Position
H＞1600	1100
H≦1600	H/2-15

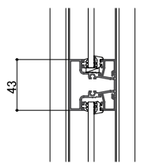

<Vertical section: With middle bar>

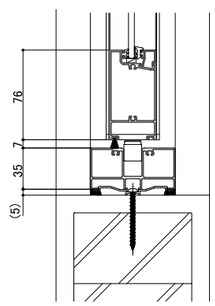

<Vertical section: Flat sill>

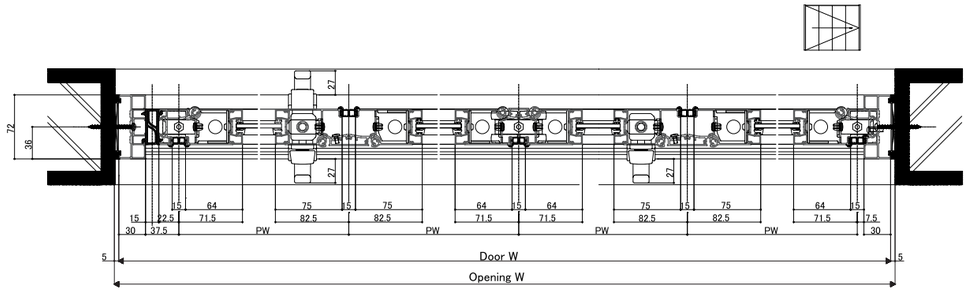

<Horizontal section: One way open folding door>

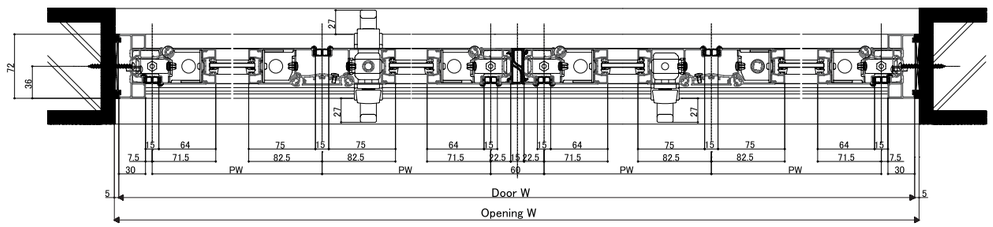

<Horizontal section: Center open folding door>

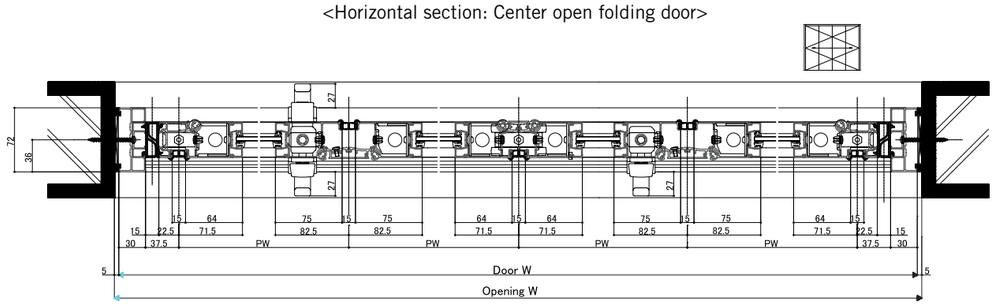

<Horizontal section: Both way open folding door>

WE70 COMBINATION

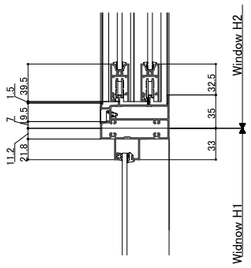

<Vertical section: Sliding/Fix transom>

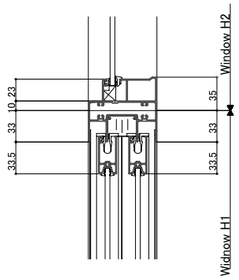

<Vertical section: Fix/Sliding transom>

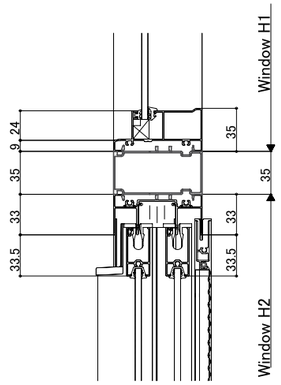

<Transom>

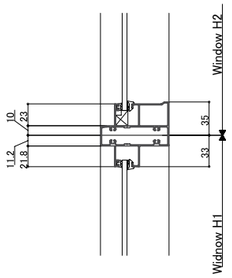

<Vertical: Fix/Fix transom>

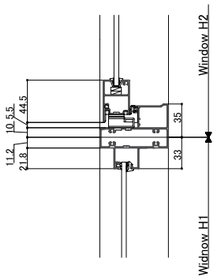

<Vertical: Projection/Fix transom>

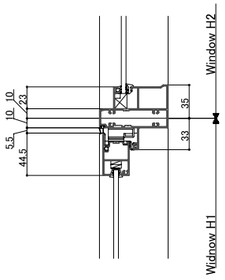

<Vertical: Fix/Projection transom>

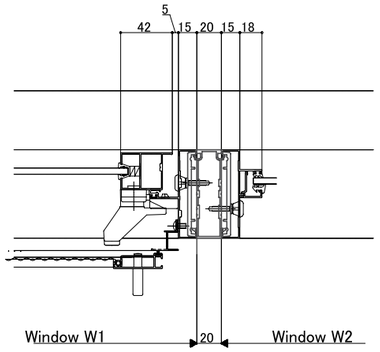

<Mullion>

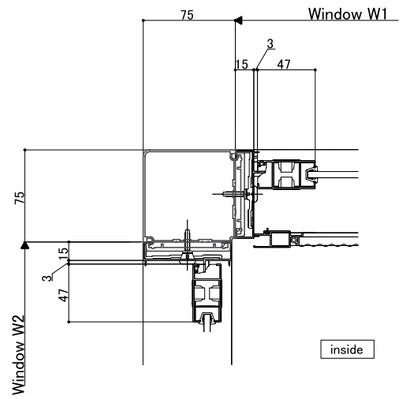

<Cor ner mullion>

P7

GOOD FIT FOR ROW HOUSES

P7 WINDOW SERIES

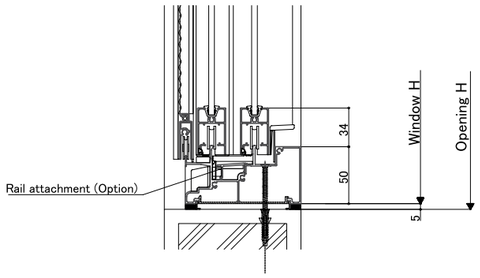

<Sill detail: With rail attachment>

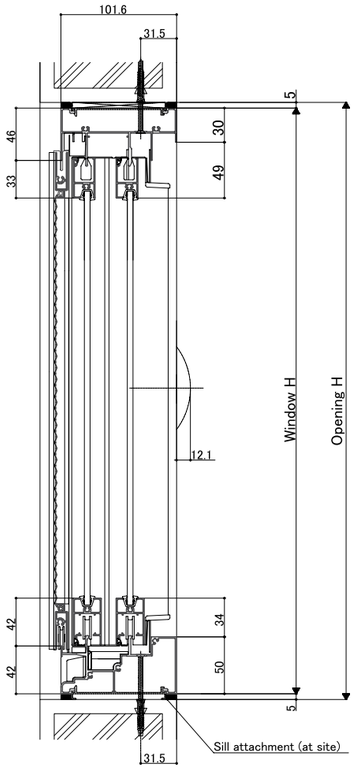

<Vertical section: 2 panels sliding window>

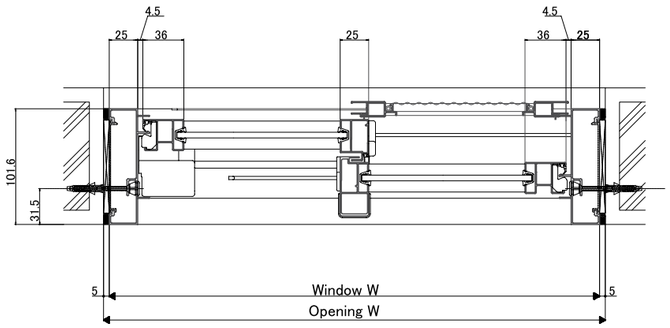

<Horizontal section: 2 panels sliding window>

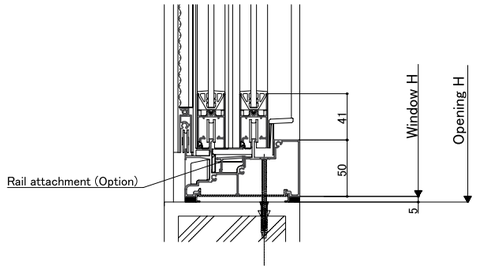

<Sill detailWith rail attachment>

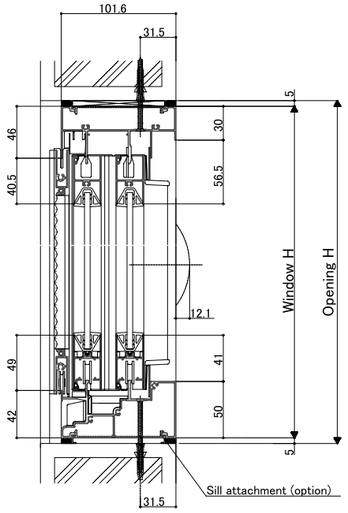

<Vertical section: 4 & SFS 3 panels sliding window>

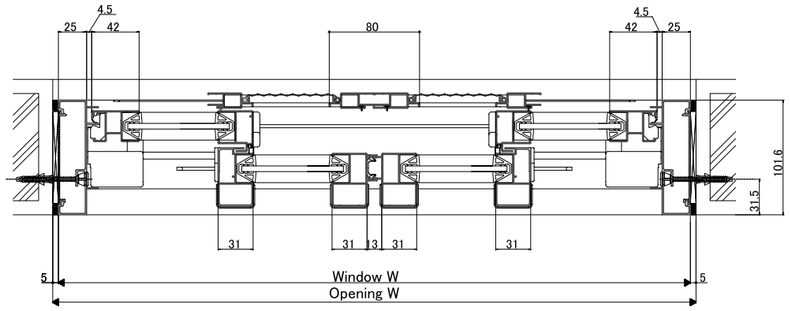

<Horizontal section: 4 panels sliding window>

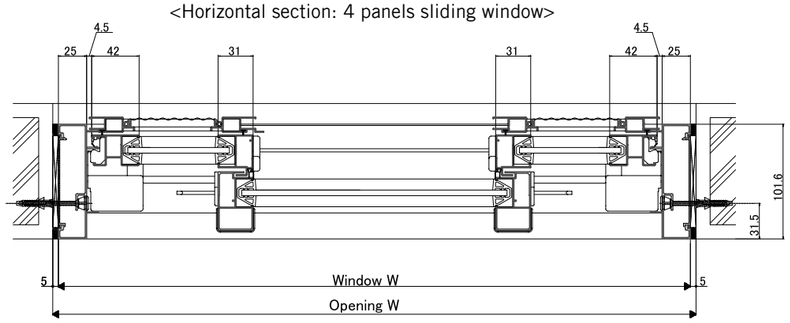

<Horizontal section: SFS 3 panels sliding window>

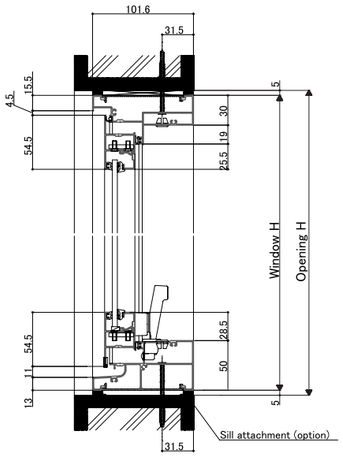

<Vertical section: Awning window>

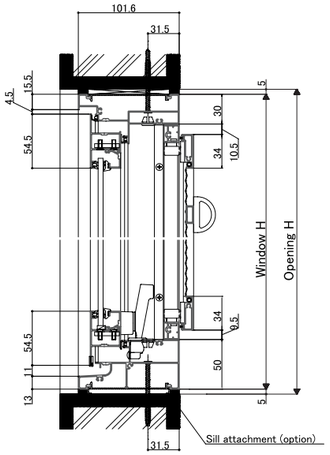

<Vertical section: Awning with screen>

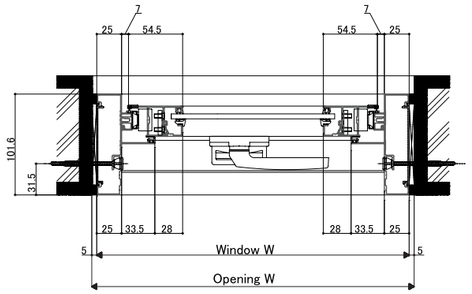

<Horizontal section: Awning window>

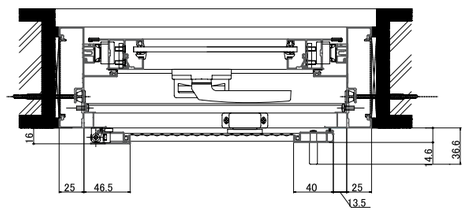

<Horizontal section: Awning with screen>

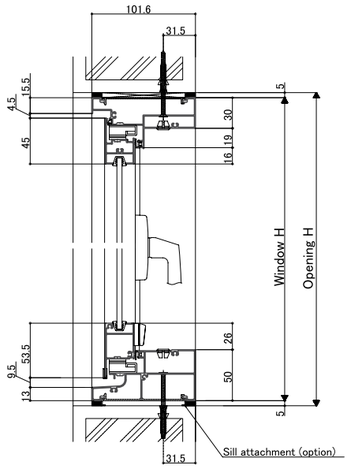

<Vertical section: Casement window>

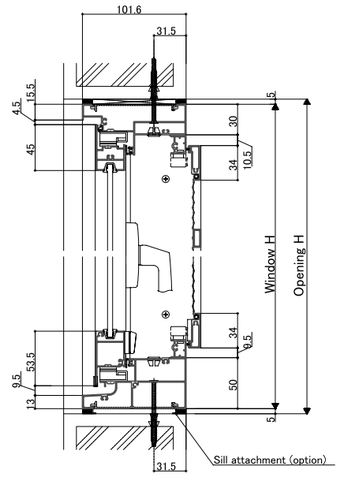

<Vertical section: Casement with screen>

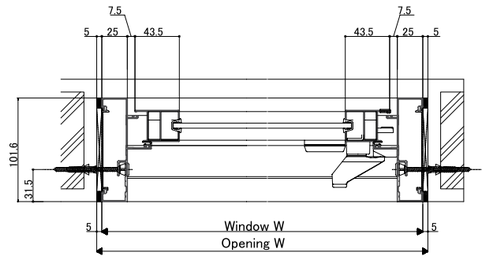

<Horizontal section: Casement window>

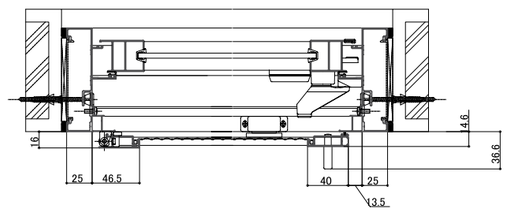

<Horizontal section: Casement with screen>

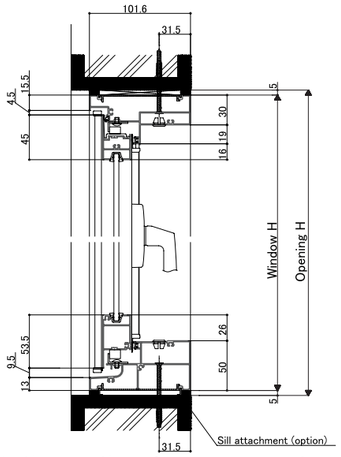

<Vertical section: Double casement window>

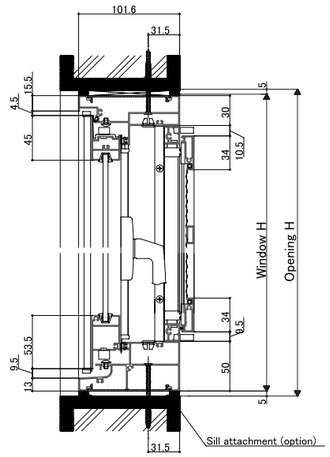

<Vertical section: Double casement with scr een>

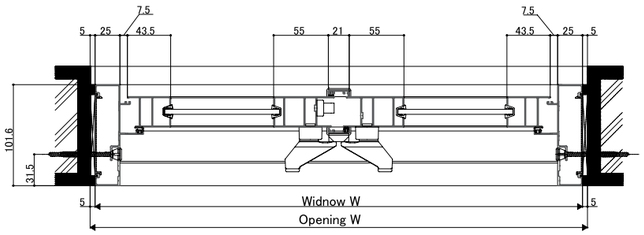

<Horizontal section: Double casement window>

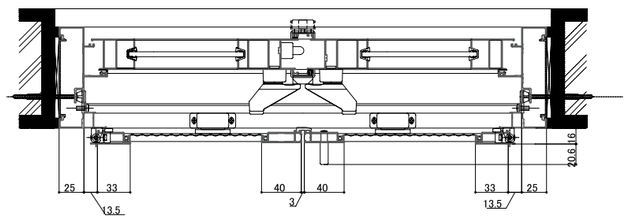

<Horizontal section: Double casement with scr een>

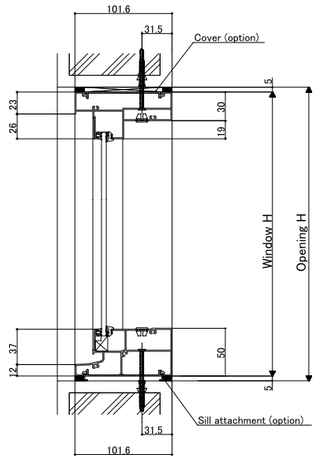

<Vertical section: Single and cor ner fix window>

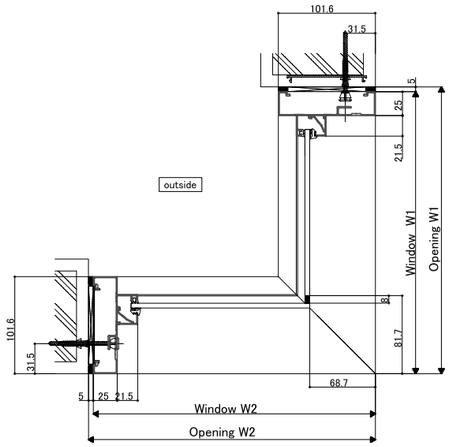

<Horizontal section: Inwa rd fix window>

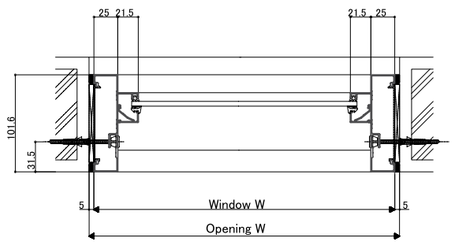

<Horizontal section: Single fix window>

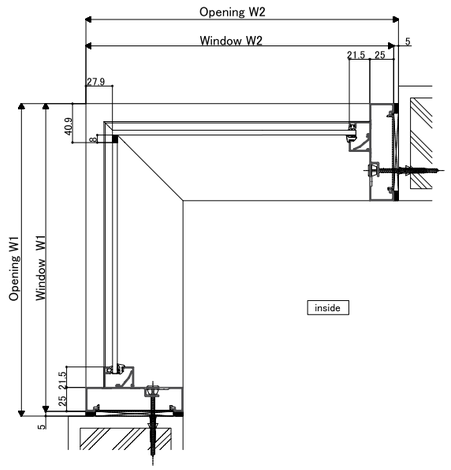

<Horizontal section: Outwar d fix window>

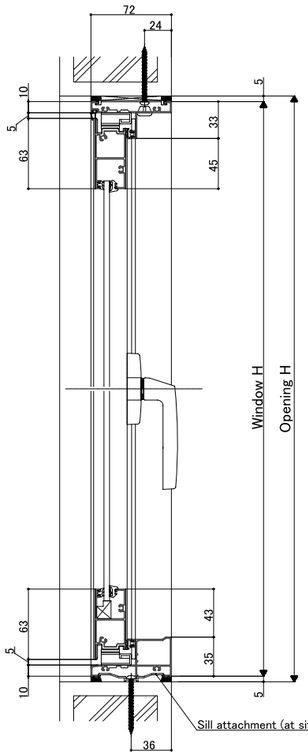

<Vertical section: Casement (single lock)>

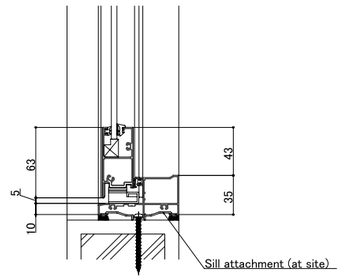

<Multi lock bottom detail>

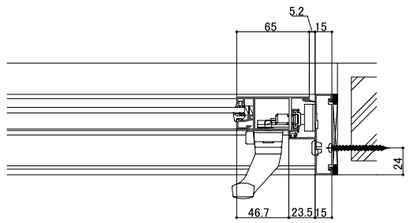

<Multi lock jamb detail>

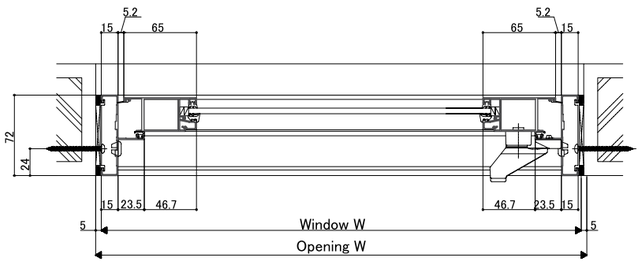

<Horizontal section: Casement (single lock)>

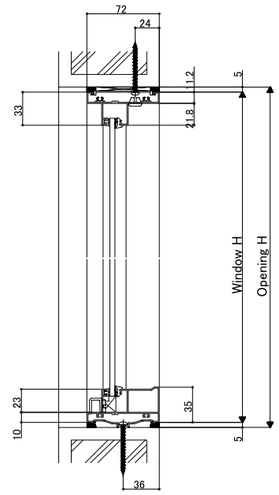

<Vertical section: Single and cor ner fix window>

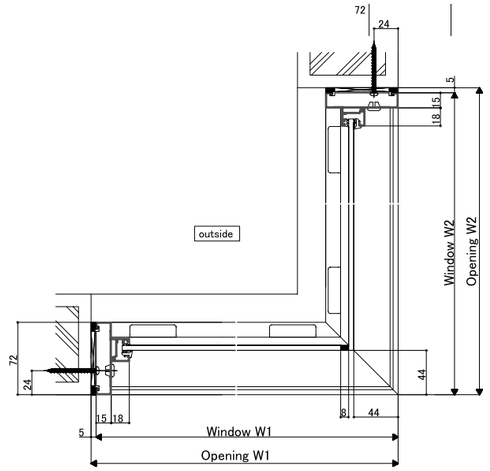

<Horizontal section: Inward fix window>

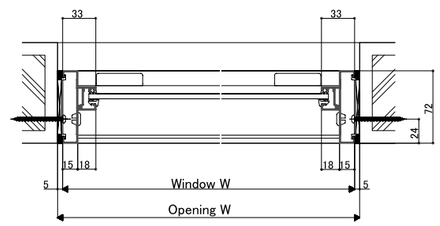

<Horizontal section: Single fix window>

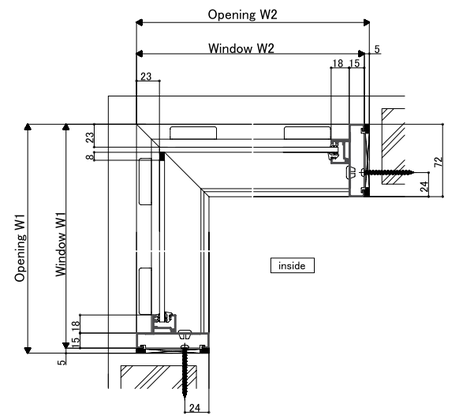

<Horizontal section: Outward fix window>

P7 DOOR SERIES

	Standard	Large size
Top Rail		
Bottom Rail	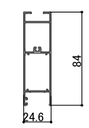	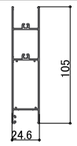

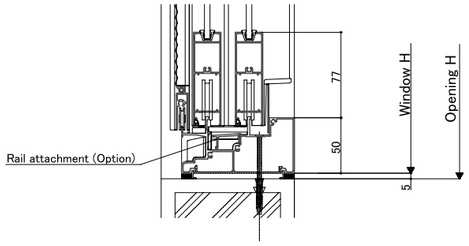

<Sill detail: With rail attachment>

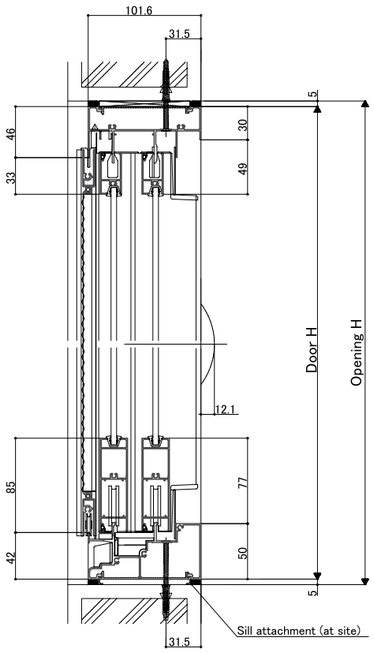

<Vertical section: 2 panels sliding door>

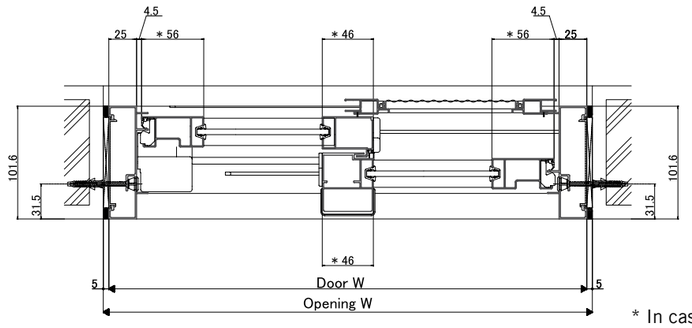

* In case of large size, 60 mm

<Horizontal section: 2 panels sliding door>

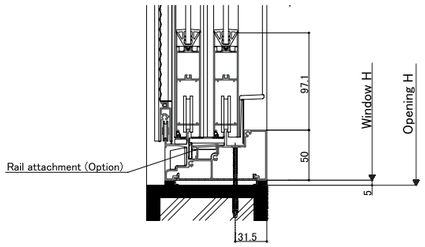

<Sill detail: With rail attachment>

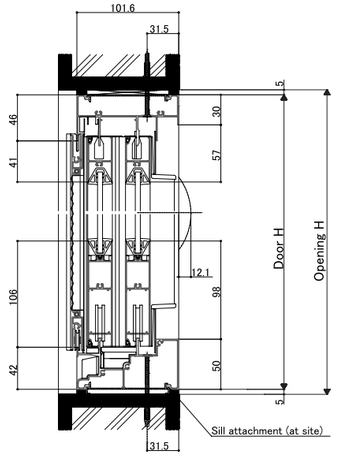

<Vertical section: 4 & SFS 3 panels sliding door>

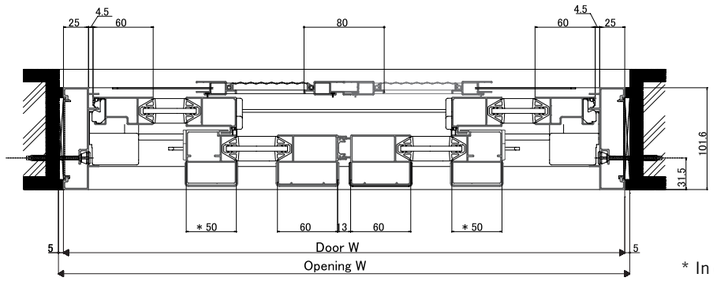

* In case of large size, 60 mm

<Horizontal section: 4 panels sliding door>

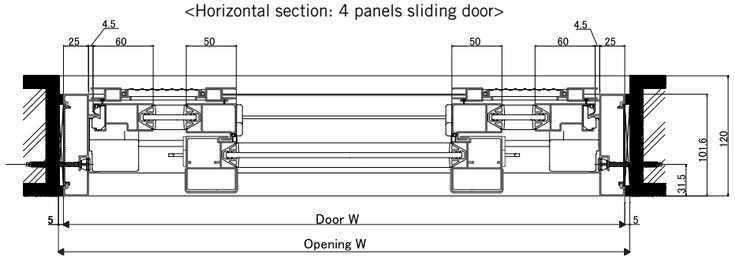

<Horizontal section: SFS 3 panels sliding door>

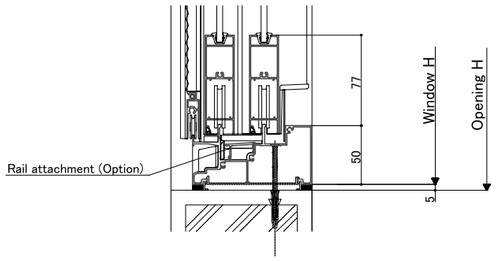

<Sill detail: With rail attachment>

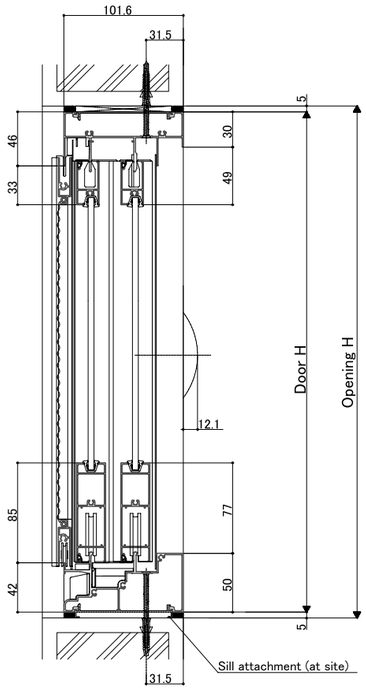

<Vertical section: 2 panels sliding entrance door>

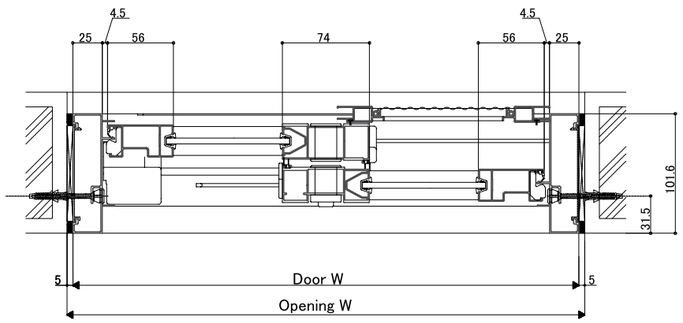

<Horizontal section: 2 panels sliding entrance door>

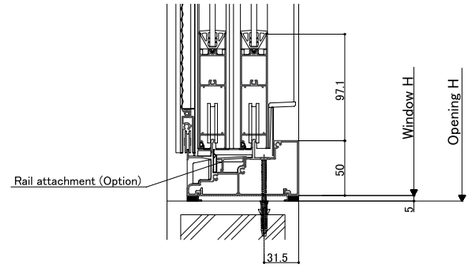

<Sill detail: With rail attachment>

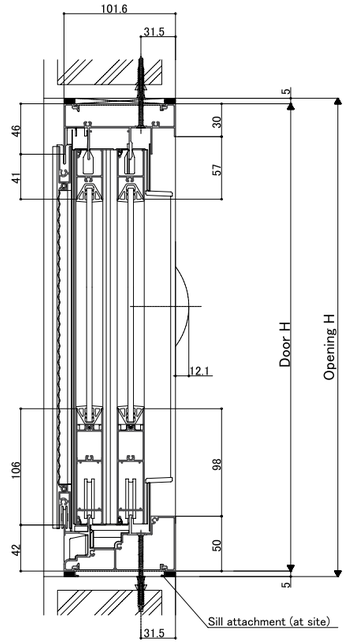

<Vertical section: 4 panels sliding entrance door>

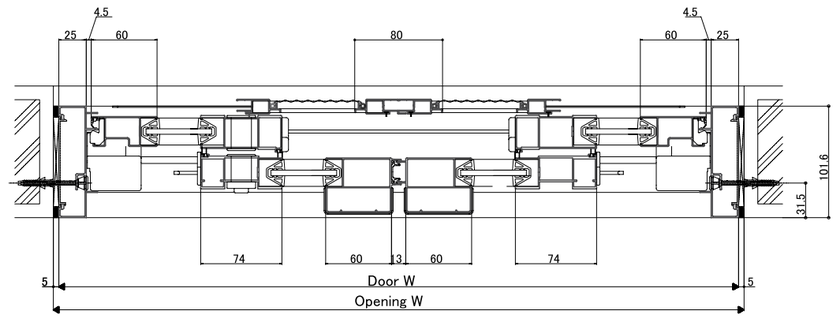

<Horizontal section: 4 panels sliding entrance door>

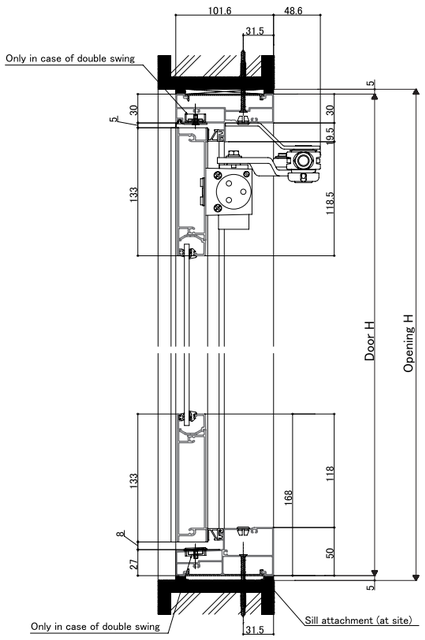

<Vertical section: Single & double out-swing door with sill>

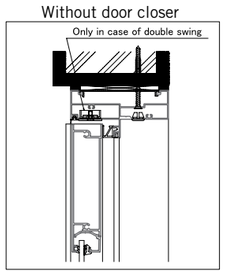

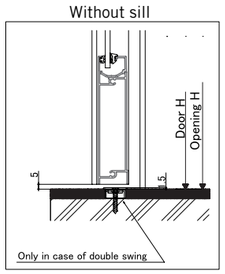

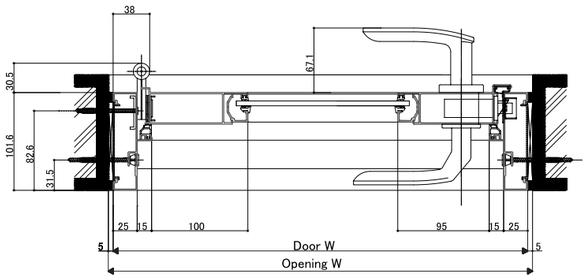

<Horizontal section: Single out-swing door>

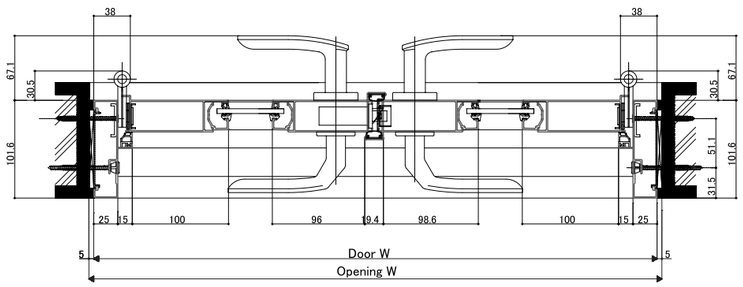

<Horizontal section: Double out-swing door>

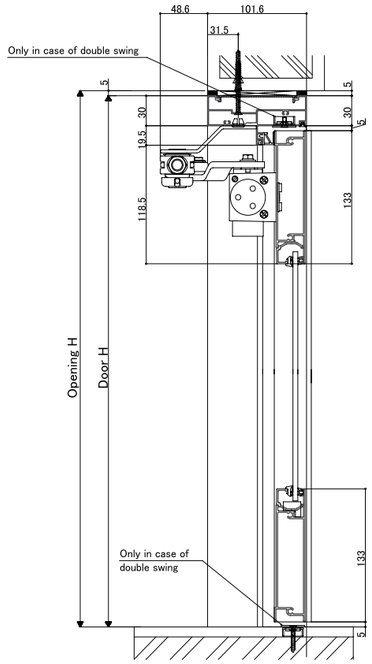

<Vertical section: Single & double in-swing door>

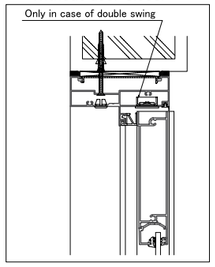

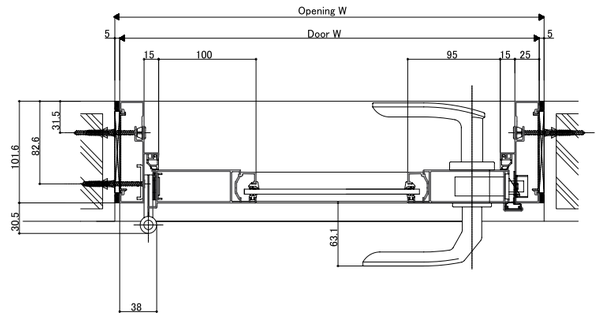

<Horizontal section: Single in-swing door >

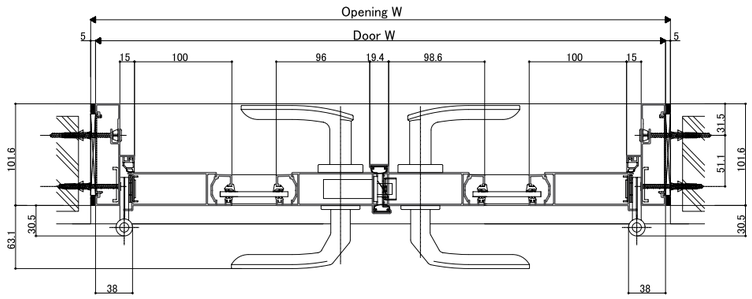

<Horizontal section: Double in-swing door>

P7 COMBINATION

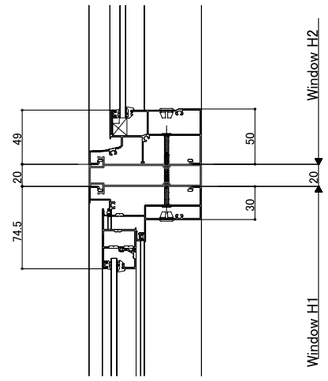

<Vertical section: Transom>

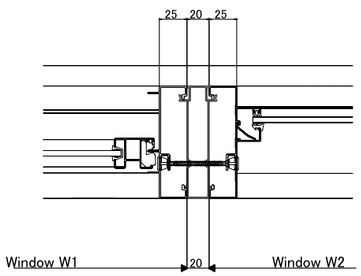

<Horizontal section: Mullion>

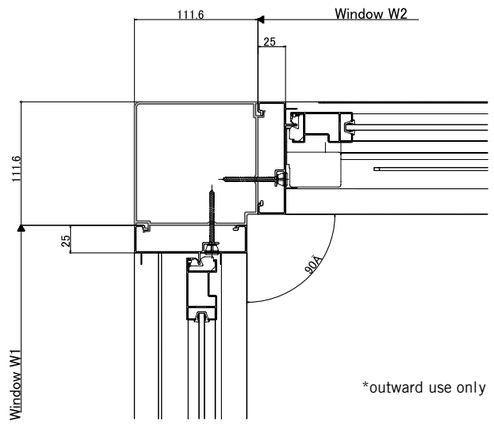

<Horizontal section: Cor ner mullion>